ASSEMBLY INSTRUCTIONS

ALUMINIUM CARPORT WITH PITCHED ROOF

CPS-ELO / CPSR-ELO / CPS-ANT / CPSR-ANT

Table of contents

Safety instructions

General

Read and keep the assembly instructions
These assembly instructions are part of this aluminium carport (hereinafter referred to simply as the "product"). It contains important information about assembly and use.
Read the assembly instructions carefully, especially the safety instructions, before installing and using the product. Failure to follow these assembly instructions may result in serious injury or damage to the product.
The assembly instructions are based on the standards and regulations applicable in the European Union. When abroad, also observe country-specific guidelines and laws.
Keep the assembly instructions for further use. If you pass the product on to third parties, be sure to include these assembly instructions.

Intended use
The product is designed exclusively for storing cars. It is not a shelter for persons and is not suitable for storing highly flammable or combustible materials.
If a fire breaks out in the product, call the fire department immediately and make sure that there are no more people under the product.
The product is intended exclusively for outdoor installation on private property. It is for private use only and is not intended for commercial use. The product is not a children's toy.
Please note that the structure may be regulated by building regulations. Before installation, ask your local building authority whether and how you are allowed to erect the product. If you violate these regulations, your permit may be revoked. If you set up the product completely without authorization or violate the building regulations, you may have to dismantle the product again.
Only use the product as described in these assembly instructions. Any other use is considered improper and may result in damage to property or even personal injury.
Read all safety information and instructions. Failure to comply can cause serious injuries.
The manufacturer or dealer accepts no liability for damage caused by improper or incorrect use.

Safety instructions

Choking hazard!
Small children can put individual assembly parts in their mouths and swallow them or get caught in the packaging film. In both cases, they can suffocate.

- ▶ Keep small children away from all installation parts and the installation site.
- ▶ Make sure that small children do not put small parts in their mouths.
- ▶ Do not allow children to play with the packaging material.

Risk of injury!
During assembly, there is a particular risk of injury for children and people with reduced physical, sensory or mental abilities. They may not be able to assess risks correctly.

- ▶ Keep children and persons with reduced physical, sensory or mental capabilities away from the product during assembly.
- ▶ Do not allow children or persons with reduced physical, sensory or mental capabilities to assemble, clean, maintain or repair the product.

Risk of injury!
When stepping onto the roof, your weight can cause you to break through the roof.

- ▶ Do not step onto the roof! Danger of falling!

Risk of damage!
Improper handling of the product can result in damage to the product.

- ▶ Close the door and window in windy and stormy weather.
- ▶ Remove snow and ice from the product. The roof is not designed to support a snow depth of more than 10 cm. Layer heights of 36 cm for dry snow, 10 cm for watery snow and 5.5 cm for ice correspond to a weight of approx. 50 kg/m2. The roof is not accessible.
- ▶ Do not place any heavy materials on the roof.
- ▶ Do not hit the twin-wall sheets with hard objects at temperatures below freezing. These can break as a result.
- ▶ Do not step on the product if the individual parts are cracked or deformed. Only replace damaged components with suitable original spare parts.
- ▶ Do not group several carports together at one location.
- ▶ **The manufacturer is not liable for storm, wind, water and snow load damage (remove snow loads from the roof regularly during the winter months). No guarantee is given for compensation for consequential and financial losses.**

Before assembly

Risk of damage!
If you open the packaging carelessly with a sharp knife or other pointed objects, the product can quickly become damaged.

- ▶ Be very careful when opening.

1. Remove individual parts of the product from the packaging.
2. Check that the delivery is complete (see page 8).
3. Check whether the individual parts of the product are damaged. If this is the case, do not install or use the product. Contact the guarantor as described on the guarantee card.

Determine installation location

Risk of damage!
Improper handling of the product can result in damage to the product.
- ▶ Set up the product in an easily accessible place that is slightly sheltered from the wind.
- ▶ Only place the product in a suitable location.
- ▶ Only place the product on a level surface.
- ▶ Anchor the product to or in the ground.

For structural reasons, the carport must be anchored with 6 point foundations so that wind, storms and snow do not cause any damage. 6 holes must be dug for the point foundations. We recommend installing the foundation points with 40×40 cm - the foundation points must be frost-proof. Please refer to the sketch for the distances:

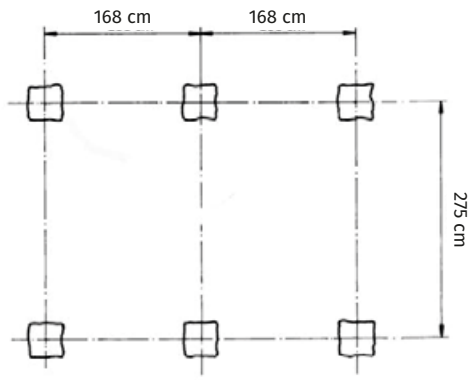

Prepa

Risk of damage!
The product is made of lightweight aluminium and hollow twin-wall sheets and is not heavy overall. Because of this and its size, it offers a lot of attack surface for wind and storms and must be particularly well secured.
- ▶ **Anchor the product to or in the ground to prevent wind and storm damage.**

The manufacturer recommends the use of post anchors to anchor the product to or in the ground. Corresponding anchors are available for screwing and cementing. You need a total of six post anchors with an internal width of 71 mm.
- ▶ Please note that the corresponding post anchors and any required connecting elements are not included with the product.

Post anchor for screwing

1. Screw the post anchors to the posts of the product. Take into account that the product should be approx. 15 mm higher on one long side to create a slight slope so that the
A rainwater can run off to one side.
2. Place the product at the planned installation location and align it accordingly. Make sure that the substrate is sufficiently firm to hold the screws for fixing the post anchors.

Post anchor for screwing

1. Dig holes for cementing in the post anchors. Make sure that the distance between the holes corresponds to the distance between the posts of the product.
2. Screw the post anchors to the posts of the product. Take into account that the product should be approx. 15 mm
B higher on one long side to create a slight slope so that the rainwater can run off to one side.
3. Place the post anchors with the product attached into the holes.
4. Cement the post anchors in place.
5. Wait until the cement sets.

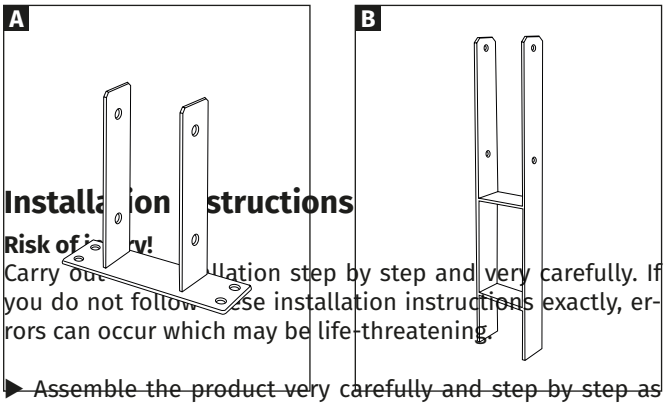

Installation instructions

Risk of injury!
Carry out the installation step by step and very carefully. If you do not follow these installation instructions exactly, errors can occur which may be life-threatening.

- ▶ Assemble the product very carefully and step by step as described in the assembly instructions.
- ▶ Set up the product with at least three adults.
- ▶ Wear protective gloves, safety goggles and safety shoes during installation.
- ▶ Ensure mutual safety while assembling the upper parts of the product. Especially while you are standing on the ladder.
- ▶ Do not walk on the roof of the product. There is a risk of falling and breaking through.

Risk of injury!
The movements during assembly can cause screw connections to loosen slightly. The product may become unstable as a result.
- ▶ Tighten all screw connections after assembly.

With multiwall sheets, it should be noted that there is an inner and outer side. The side labelled "outside" on the edge has a UV-protective coating and faces upwards after installation.

Safety instructions

Assembly

Risk of damage!
Improper handling of the product can result in damage to the product or damage to property.

- ▶ Mount the product on a soft and clean surface. If necessary, place a blanket or similar underneath so that the surfaces cannot be scratched or damaged.
- ▶ Proceed carefully when assembling the product and follow the assembly instructions.

Assembly steps

- ▶ Assemble the product using the following instructions and diagrams.
- ▶ Complete all installation steps in the specified order.
- ▶ Three adults are required for assembly.
- ▶ Use the following tools, which are not supplied, for assembly:
  - Phillips screwdriver
  - SW-10 wrench
  - Cordless screwdriver
  - Measuring tape
  - Spirit level
  - Ladder

When installing, make sure that you have sufficient freedom of movement in every direction (at least 1.5 meters). Familiarize yourself once again with the individual parts illustrated before assembly.

Cleaning and maintenance

Risk of damage!
Improper handling of the product can result in damage to the product.

- ▶ Do not use aggressive cleaning agents, brushes with metal or nylon bristles or sharp or metallic cleaning objects such as knives, hard spatulas and the like. These can damage the surfaces.
- ▶ Do not use a steam or high-pressure cleaner for cleaning. Otherwise the product may be damaged.

1. Remove any dirt with a slightly damp cloth and a little mild detergent if necessary.
2. Then wipe the product dry with a lint-free cloth.

Risk of damage!
The product presents a large surface area vulnerable to wind and storms. This can cause screw connections to loosen quickly.

- ▶ After strong winds or storms, check that the twin-wall sheets are firmly in place and that the screw connections are tight.
- ▶ Check every three to four months whether the screw connections of the product are still tight.
- ▶ Check the fit of the multiwall sheets and the screw connections after strong winds or storms.
- ▶ Do not hit the twin-wall sheets with hard objects at temperatures below freezing.
- ▶ Remove snow and ice from the roof of the product during the winter months. (Attention! - The roof is not accessible!)
- ▶ Observe the local building regulations.

Disposal

Dispose of packaging!
Dispose of the packaging according to type.
Put cardboard and cartons with the recycling paper. Films in the recycling collection.

Dispose of the product!
Dispose of the product in accordance with the laws and regulations applicable in your country.

Technical specifications

Model	Aluminium carport with pitched roof
Item number	CPS-ELO / CPSR-ELO
	CPS-ANT / CPSR-ANT
Weight	127 kg
Dimensions (WxD)	285 x 505 cm
Width incl. rain gutter	298 cm
Clearance width:	268 cm
Clearance height:	216 cm
Max. Roof load:	200 kg/m2

Guarantee declaration

Guarantee

Guarantee period
In addition to the seller's statutory liability for defects, we provide a 15-year guarantee on the construction and frame for carports purchased from us and a 10-year guarantee for our multiwall sheets.

The guarantee period begins on the date the goods are taken over. Any replacement deliveries shall not result in an extension of the guarantee period.

Scope of guarantee
The guarantee for our carports applies exclusively to the construction and frame. Delivery components such as seals, plastic parts and connecting elements are not covered by the guarantee. The guarantee also does not extend to our supplementary greenhouse accessories.

The guarantee for our twin-wall sheets extends exclusively to their weather resistance. It only applies in connection with the purchase of one of our products.

In the event of justified claims under the guarantee, the following guarantee plan applies to the multiwall sheets:

Time from date of purchase Material replacement:
Up to 5 years 100 %
- In the 6. Year 75 %
- In the 7. Year 60 %
- In the 8. Year 45 %
- In the 9. Year 30 %
- In the 10. Year 15 %

Guarantee conditions
The basic prerequisites for claiming the guarantee are professional installation and proper maintenance of both the frame and the hollow multiwall sheets.

The guarantee expires in the event of reassembly.

Guarantee exclusion
Furthermore, the warranty does not cover defects and damage that are directly or indirectly attributable to:
- use of the material that does not comply with our instructions
- Damage due to improper handling before, during or after the installation work
- Damage due to force majeure
- improper foundations and fastenings
- an unsuitable location (e.g. particularly exposed to wind or heat)
- insufficiently secure anchoring of the product
- on-site modifications to the delivered item
- improper cleaning with unsuitable cleaning agents (e.g. aggressive cleaning agents, salt water, etc.)
- lack of care (cleaning) of the product
- Contact of the material with incompatible chemicals
- incorrect installation of the twin-wall sheets and the causing of scratches and stresses or the use of adhesives or sealants or other incompatible materials
- Colour changes of the powder-coated surface due to solar radiation
- a change in the surface of the bare pressed parts due to the formation of a natural oxide layer
- Maintenance joints (silicone joints)
- commercial use

Guarantee claims can only be made in conjunction with the original proof of purchase, provided that the customer has fulfilled his payment obligations under the purchase contract.
If a guarantee claim is made within the warranty period and is deemed justified, we will supply a replacement free of charge. This guarantee does not cover any other warranty claims, such as compensation for direct or indirect damage or other consequential damage.

Any further liability, e.g. for the removal or installation of claimed or subsequently delivered parts or for other ancillary costs or consequential damage, is not covered by this guarantee. Such liability exists only within the scope of the statutory provisions.

The roof of your carport must be cleared of snow and ice during the winter months!

1/3 Aluminium frame package A (package 1 of 3)

2/3 Aluminium frame package B (package 2 of 3)

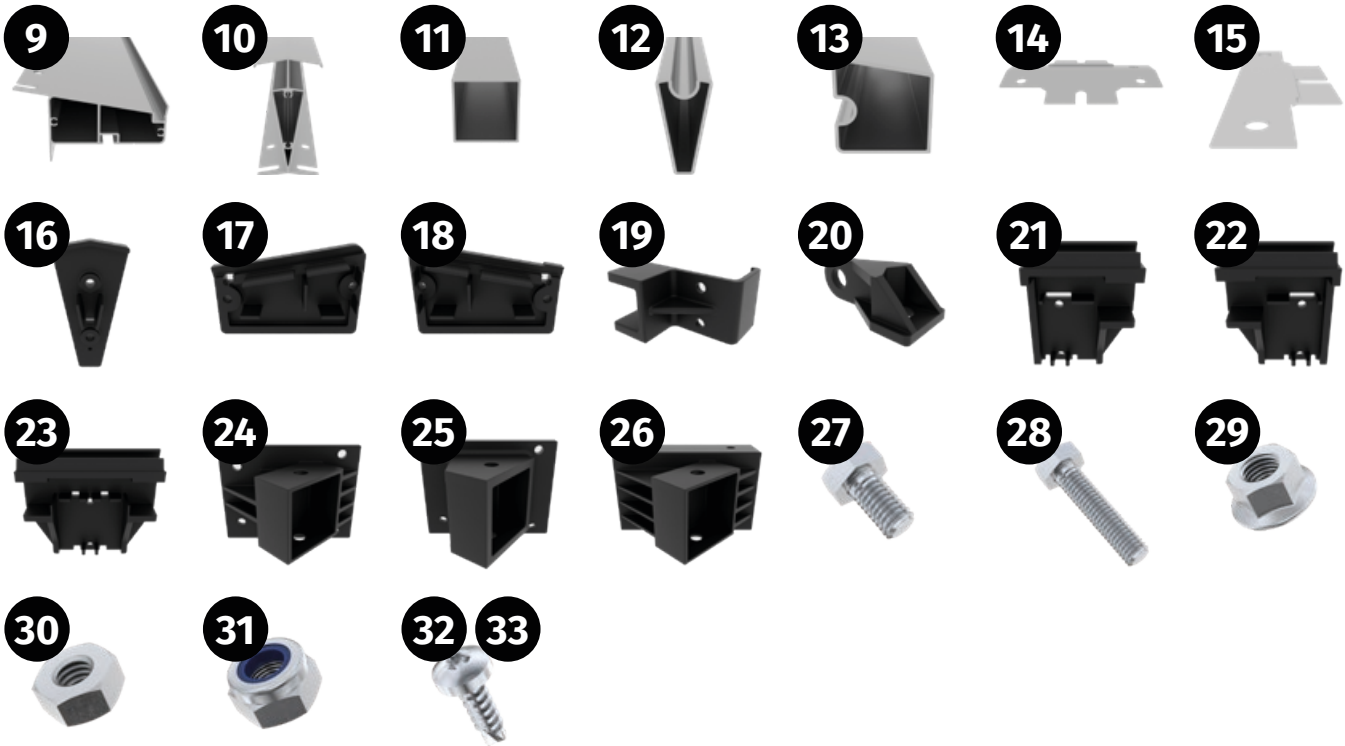

1/3 Twin-wall sheet package (package 3 of 3)

Note

Check that the delivery is complete. Check whether the individual parts of the product are damaged. If this is the case, do not install or use the product. Please contact us in this case!

1/3 Aluminium frame package A (package 1 of 3)

Part	Item number	Designation	Length	Pcs.
1	CPA210_2130_v1	Post/upright 70x70 mm	2130 mm	**6**
2	CPA203_1678_v1	Ridge component	1678 mm	**3**
3	CPA206_1429_v1	Rafter exterior	1429 mm	**4**
4	CPA217_0827_v1	Tension strut	827 mm	**5**
5	CPA216_0781_v1	Stiffening profile for multiwall sheets	781 mm	**12**
6	F202018_0782_v1	Support profile	782 mm	**12**
7	1408_1558_v1	Wind brace 1558	1558 mm	**4**
8	B1502_1351_v1	Assembly aid/cross connector	1351 mm	**6**

2/3 Aluminium frame package B (package 2 of 3)

9	CPA205_1678_v1	Longitudinal beam	1678 mm	**6**
10	CPA207_1429_v1	Rafter inside	1429 mm	**10**
11	CPA204_0323_v1	Diagonal brace	323 mm	**18**
12	CPA217_0200_v1	Ridge connector	200 mm	**2**
13	CPA213_0200_v1	Longitudinal beam connector	200 mm	**4**
14	CPA215_0110_v1	Ridge connecting plate	110 mm	**2**
15	CPA214_0110_v1	Longitudinal beam connecting plate	110 mm	**4**
16	CPP201	Ridge cover cap		**2**
17	CPP202L	Cover cap for left side rail		**2**
18	CPP202R	Cover cap for right side rail		**2**
19	CPP205	Support bracket		**24**
20	CPP209	Connection cross connector		**6**
21	CPP204L	Cover cap crossbar left		**2**
22	CPP204R	Cover cap crossbar right		**2**
23	CPP203	Cover cap crossbar center		**10**
24	CPP206	Diagonal brace connector 45°		**24**
25	CPP208	Diagonal brace connector 35°		**6**
26	CPP207	Diagonal brace rafters connector		**6**
27	690509	M6x12 screw		**76**
28	M6X50	M6x50 screw		**18**
29	690548	Hex nut M6 with flange		**70**
30	690547	Nut M6		**6**
31	690549	Hex nut M6 - self-locking		**18**
32	9040556	Self-tapping screws 4.8 x 13		**112**
33	SCHR4.8X22	Self-tapping screws 4.8 x 22		**100**

3/3 Twin-wall sheet package (package 3 of 3)

34	1432/825/10	Carport roof panel 1432x825x10 mm	1432 mm	**12**

Note: If you have ordered an optional rain gutter as an accessory, the carport consists of **4 packages**!
Further details on the rain gutter, the parts of the rain gutter and their installation can be found from page 42 onwards!

1a

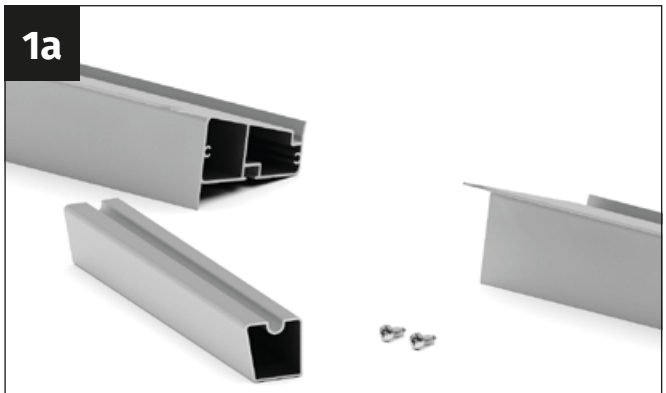

Prepare three longitudinal beam profiles, two connecting pieces for longitudinal beams and four 4.8x13 mm self-tapping screws.

1b

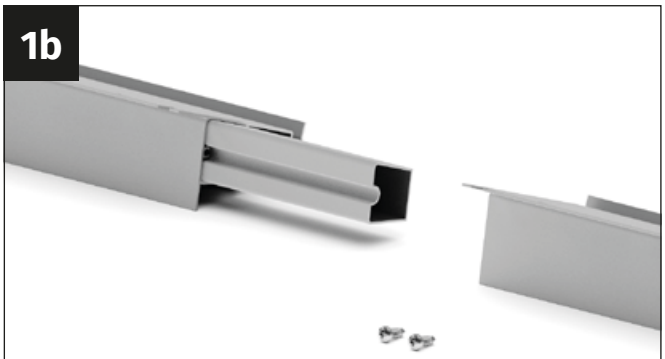

Insert the longitudinal beam connector halfway into the longitudinal beam profile. Make sure that the connector protrudes 100 mm from the longitudinal beam.

1c

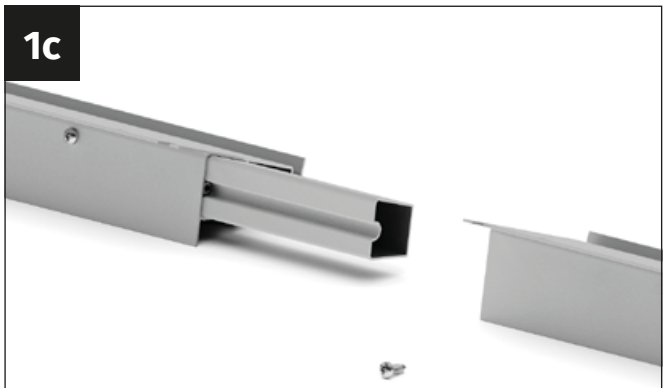

Screw the connector in place using a 4.8 x 13 mm self-tapping screw.

1d

Place the second longitudinal beam profile on the already installed connector.

1e

Press the side longitudinal beam profiles firmly together until no gap is visible. Then screw the connector together with a 4.8 x 13 mm self-tapping screw.

Repeat

Install the second longitudinal beam in the same way as the first.

Repeat these assembly steps with the third longitudinal beam profile.

2a

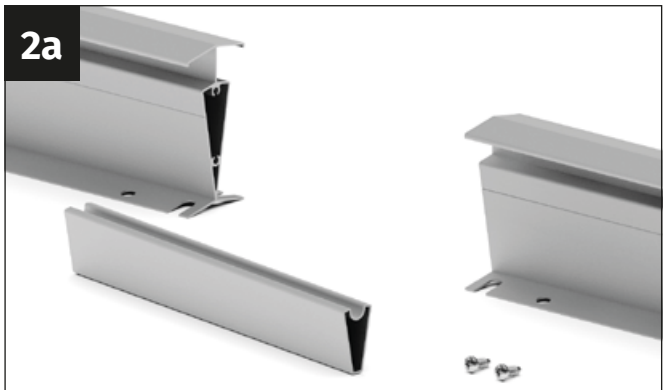

Prepare three ridge profiles, two ridge connectors and four 4.8x13 mm self-tapping screws.

2b

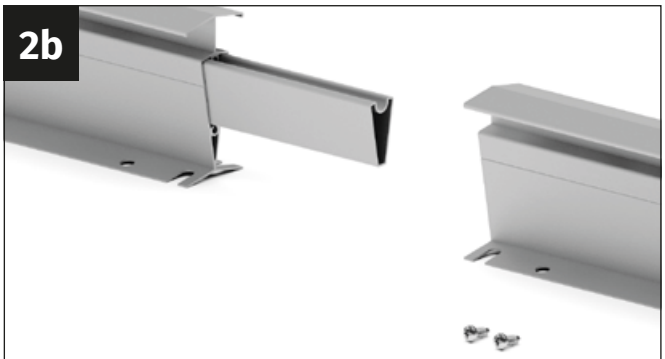

Insert the ridge connector halfway into the ridge profile. Make sure that the connector protrudes 100 mm from the ridge profile.

2c

Screw the connector in place using a 4.8 x 13 mm self-tapping screw.

2d

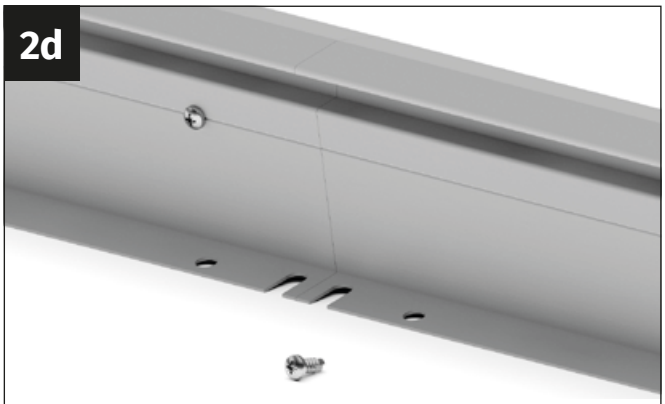

Place the second ridge profile on the already installed connector.

2e

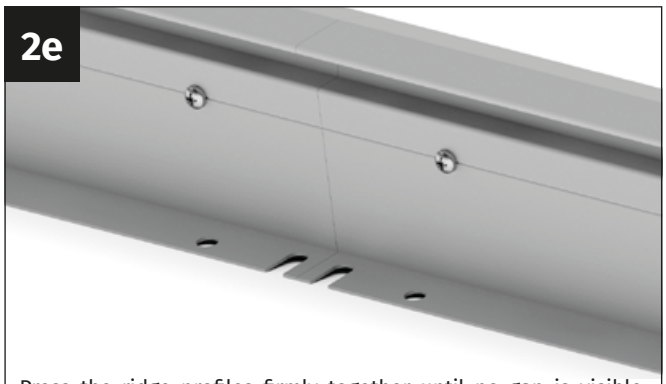

Press the ridge profiles firmly together until no gap is visible. Then screw the connector together with a 4.8 x 13 mm self-tapping screw.

Repeat

Repeat these assembly steps with the third ridge profile.

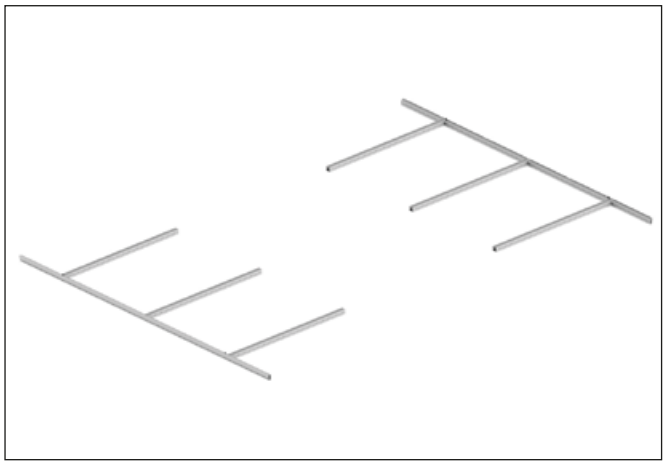

Note

It is best to carry out this assembly step on the floor. To do this, lay out the required components (6 posts and 2 longitudinal beams) on the floor before you start screwing them together.

3a

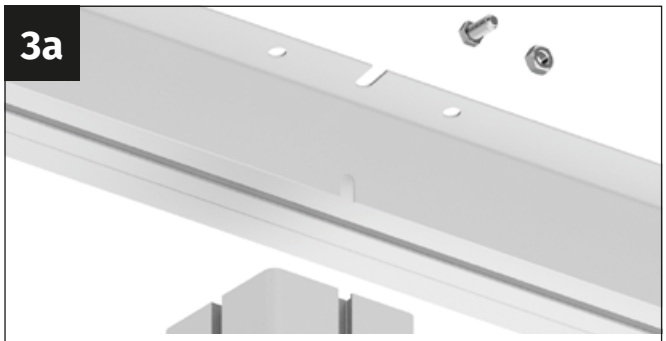

Take a post, an M6x12 bolt and an M6 flange nut. Make sure that the screw channel is only present on one side of the post - this faces the longitudinal beam.

3b

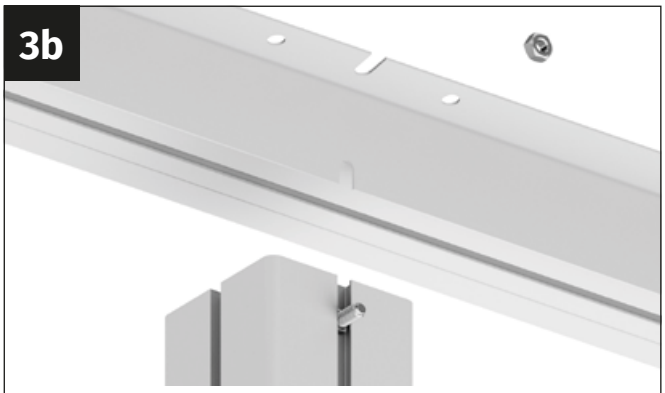

Insert the M6x12 screw into the screw channel of the post.

3c

Place the longitudinal beam on the post and insert the screw into the prepared cut-out in the longitudinal beam.

3d

Screw the longitudinal profile to the post using an M6 flange nut.

Repeat

Carry out these installation steps for all 6 posts through.

4a

Pick up two flat aluminium cross connectors (length 1351 mm), two M6x12 mm screws, and two M6 flange nuts.

4b

Position the two flat aluminium cross connectors next to each other so that the holes are congruent.

4c

Insert an M6x12 mm screw through each of the overlapping holes.

4d

Screw the flat aluminium cross connectors tightly with M6 flange nuts.

5a

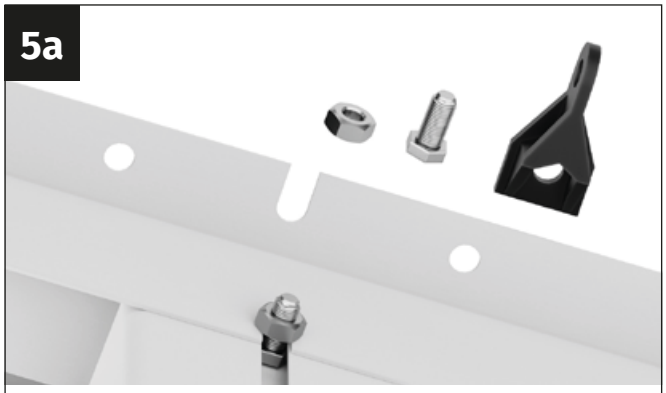

Take a plastic part CCP209, a screw M6x12 mm and a nut M6 without flange.

5b

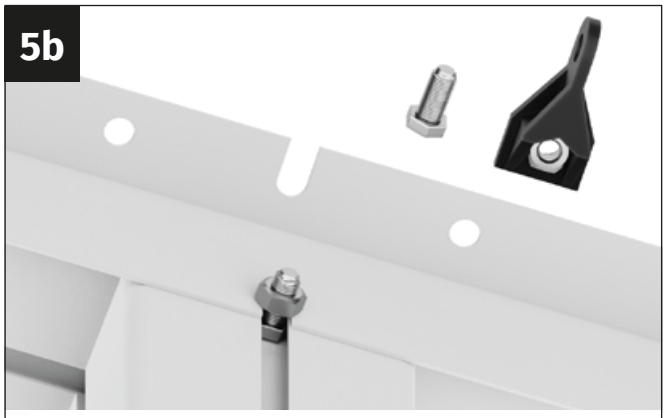

Press the M6 nut into the plastic part CCP209.

5c

Position the plastic part CCP209 on the punched-out section of the longitudinal beam.

Note

The plastic parts must be fitted in the cut-outs next to the supports. Make sure that they are positioned the same on all longitudinal beams so that the cross connectors later run straight from left to right.
Make sure that the plastic parts on the two outer posts are screwed to the holes that do not face the outside of the carport. These holes will be needed later to attach the wind bracing!"

5d

Screw the plastic part CCP209 tightly with the M6x12 mm screw.

Repeat

Screw all 6 pieces of plastic part CCP209 together in the same way.

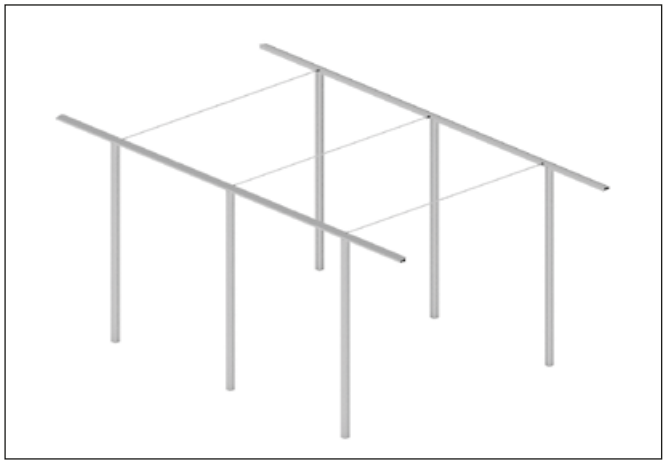

Note

In this assembly step, the prepared parts are set up and screwed together with the assembly aids. At least three people are required for this step.

Risk of injury

People can be hit by falling components, which can lead to injuries. Carry out the installation with at least three adults.

Surrounding objects can be hit by falling components!

6a

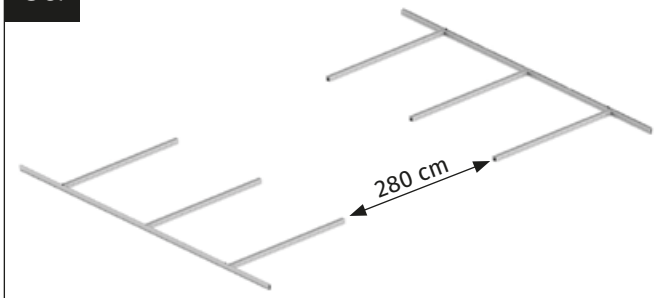

Place the two prepared long sides on the floor as shown. Make sure that the distance between the posts is 280 cm.

6b

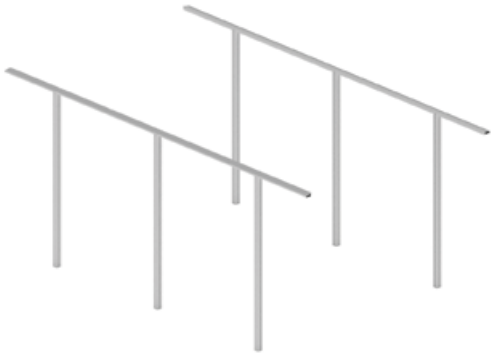

Have one person erect each of the two long sides. Please note that these parts are still relatively unstable and should be kept as plumb as possible.

6c

Take a flat aluminium cross connector, an M6x12 mm screw and an M6 flange nut.

6d

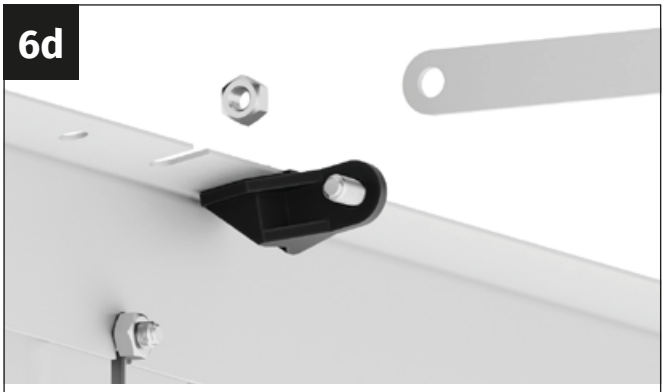

Insert the M6 nut through the hole in the plastic part CCP209.

6e

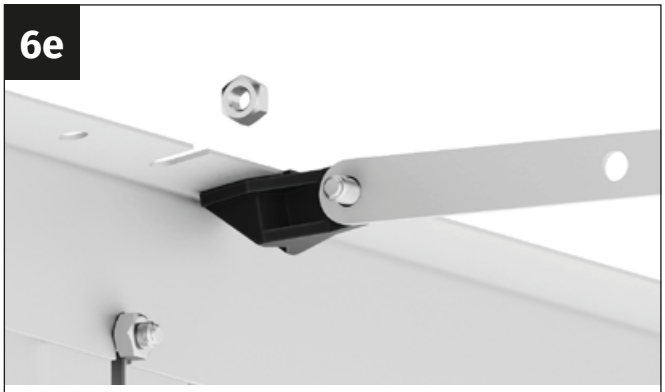

Place the flat aluminium cross connector so that the M6x12 mm screw protrudes through the hole in the cross connector."

6f

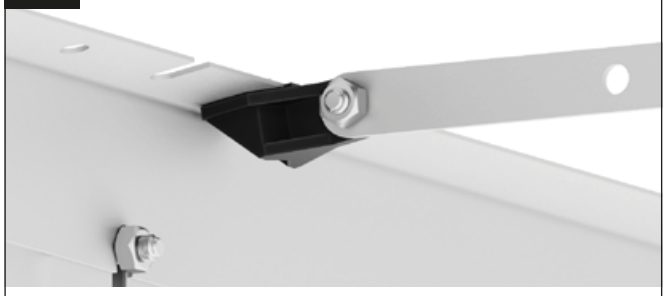

Screw the flat aluminium cross connector tightly with an M6 flange nut. Then screw on the second side of the cross connector.

Repeat

Install the other two cross connectors in the same way.

Note

After installing the cross connector , we recommend aligning the structure and spreading the side parts to prevent them from tipping over. This means that the helpers do not have to continue holding these parts and can provide support in the next assembly step.

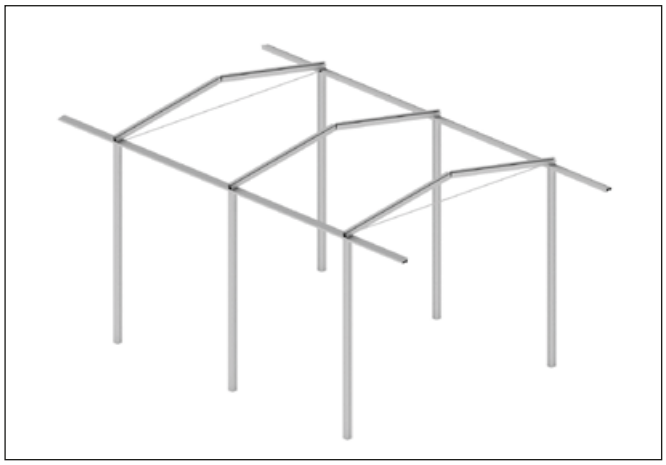

Take a rafter, an M6x12 mm screw and an M6 flange nut.

Note

In this assembly step, the prepared ridge and rafters are positioned and attached to the posts.

At least three people are required for this step. One person at a time should stand on a Ladder and hold the ridge at the height of the outer posts, while another person first screws the two rafters together on one side and then on the other. Finally, the rafters are attached to the middle posts."

7b

Insert the M6x12 mm screw into the screw channel of the rafter.

7c

Place the rafter on the longitudinal beams and insert the M6x12 mm screw into the prepared cut-out in the longitudinal beam. The person on the ladder should hold and secure the top of the rafter.

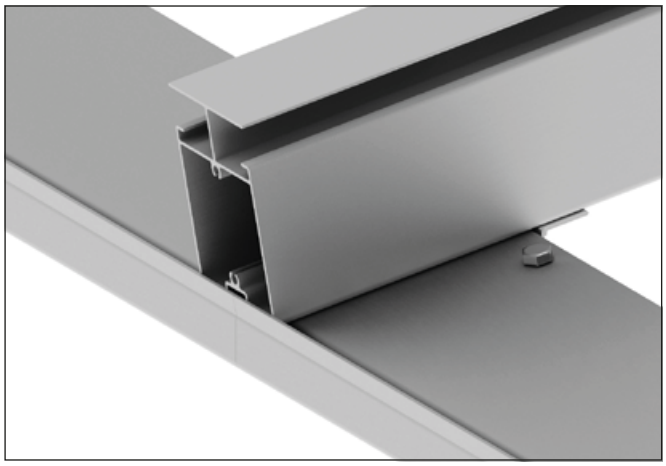

Note

Check that the outside of the roof rafters is firmly against the supporting edge of the longitudinal beams to ensure the correct position. Make sure that all other rafters also always butt firmly against the supporting edge of the longitudinal beams."

7d

Screw the rafter to the longitudinal profile using an M6 flange nut.

7e

The person on the ladder can now place the ridge on the rafters and position both parts to fit.

Repeat

Repeat this installation step for the opposite rafter in the same way.

Then repeat this step on the other side of the ridge, where the second person is standing on the ladder and holding the ridge.

8a

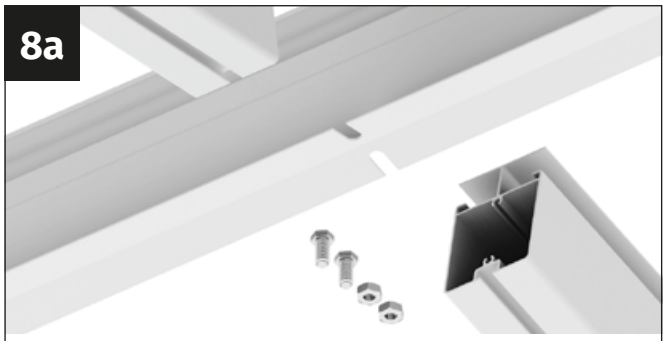

Take two M6x12 mm screws and two M6 flange nuts. Lift the ridge from the two rafters so that there is enough space to insert the screws into the screw channels of the rafters.

8b

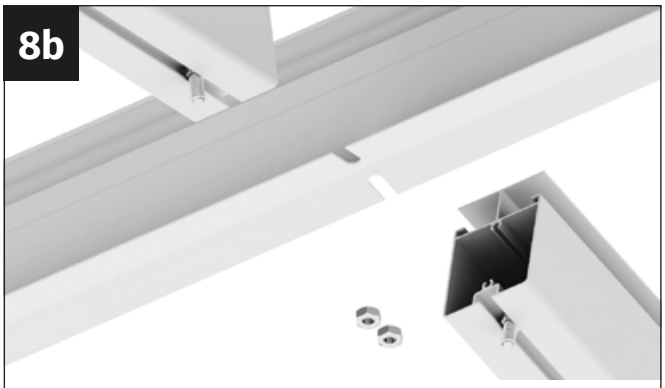

Insert an M6x12 mm screw into the screw channel of each rafter.

8c

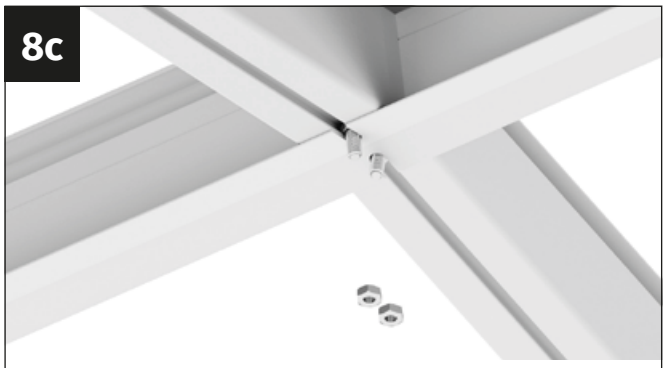

Place the ridge back onto the rafters and insert the M6x12 mm screws into the prepared cut-outs in the ridge.

8d

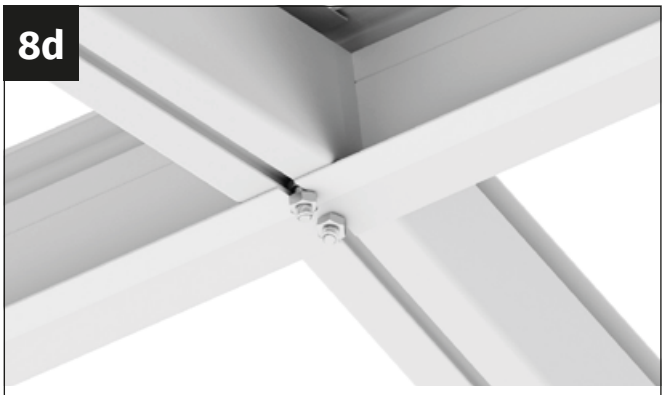

Screw each rafter firmly to the ridge using an M6 flange nut.

Repeat

Repeat these assembly steps in the same way on the purlins on the other side of the ridge.

Continue by mounting the center rafters to the center posts of the longitudinal beams in the same way.

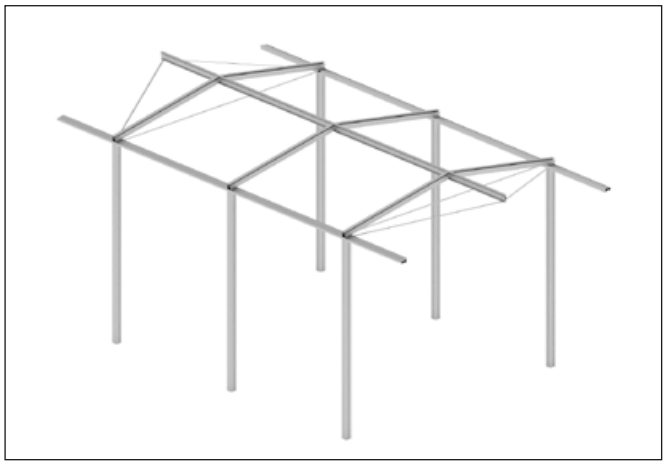

Note

In this installation step, four wind braces are attached to the roof. These wind braces not only serve to stabilize the roof itself but are also crucial for the alignment and stability of the roof structure during further assembly.

9a

Take two wind braces, two M6x12 mm screws and two M6 flange nuts.

9b

Insert the two M6x12 mm screws from the outside through the holes in the ridge.

9c

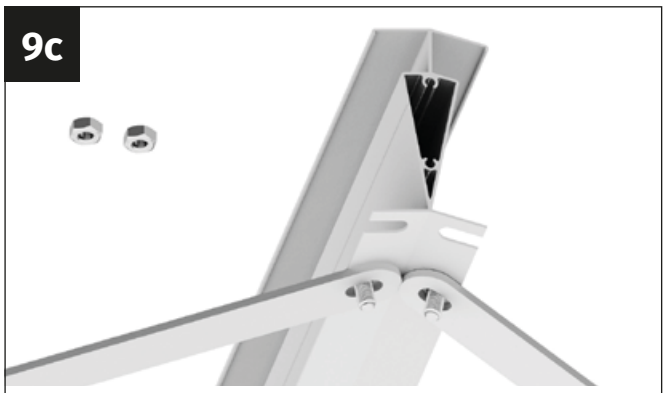

Position the wind bracing so that the M6x12 mm screws protrude through the cut-outs in the wind bracing.

9d

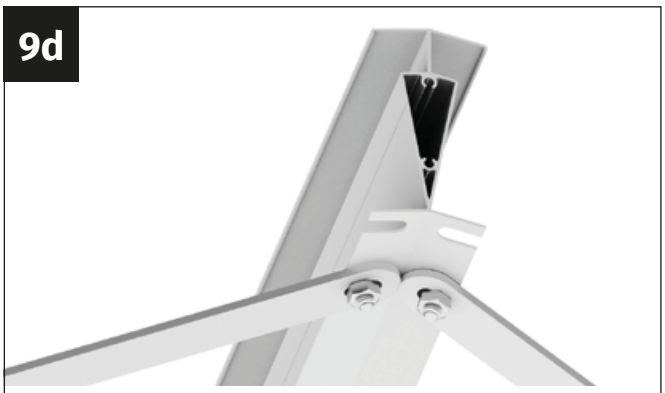

Screw the wind bracing firmly to the ridge using M6 flange nuts.

9e

Take an M6x12 mm bolt and an M6 flange nut for each of the two wind bracings.

9f

Insert the M6x12 mm screw from the outside through the hole in the longitudinal beam.

Position the wind brace so that the M6x12 mm screws protrude through the cut-outs in the wind brace.

Screw the wind bracing firmly to the longitudinal beam using M6 flange nuts.

Repeat

Repeat these assembly steps with the wind bracing on the second side of the ridge.

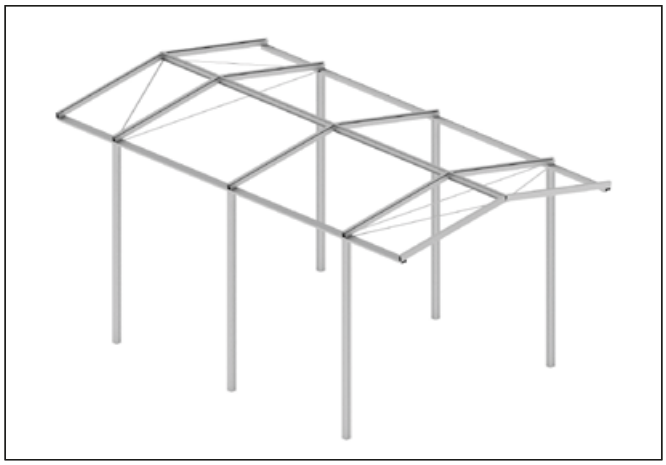

Note

In this assembly step, the four outer rafters are attached to the roof.

10a

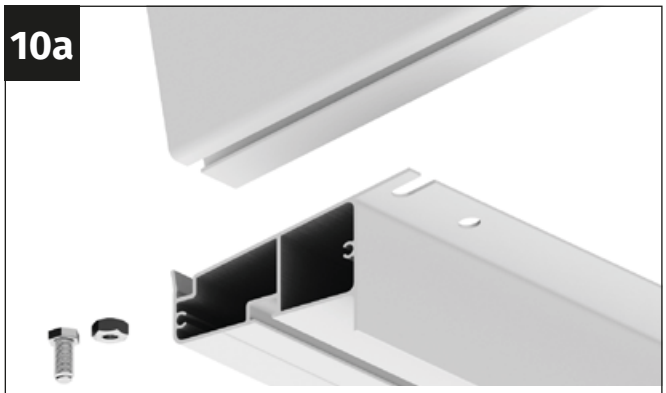

Take the outer rafter, an M6x12 mm screw and an M6 flange nut.

10b

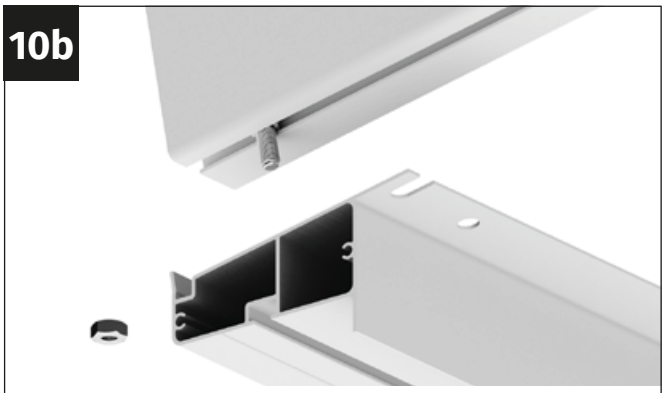

Insert the M6x12 mm screw into the screw channel of the outer rafter.

10c

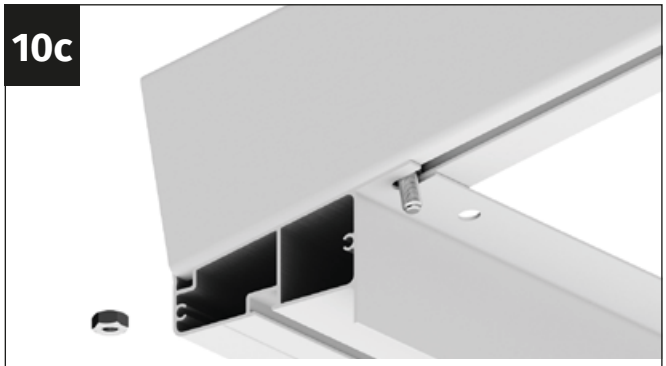

Place the outer rafter on the longitudinal beam and insert the M6x12 mm screws into the prepared cut-outs in the longitudinal beam.

10d

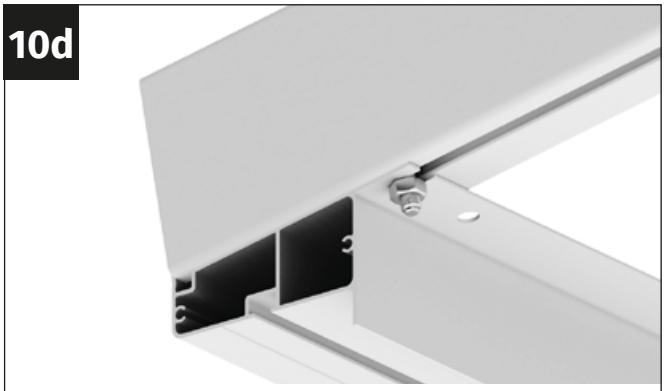

Screw the outer rafter firmly to the longitudinal beam using a 6 flange nut.

10e

Use an M6x12 mm bolt and an M6 flange nut to screw the top of the outer rafter in place.

10f

Insert the M6x12 mm screw into the screw channel of the outer rafter.

10g

Place the outer rafter on the ridge and insert the M6x12 mm screws into the prepared cut-outs in the ridge.

10h

Screw the outer rafter firmly to the ridge using an M6 flange nut.

Repeat

Repeat these assembly steps in the same way with the remaining three outer rafters.

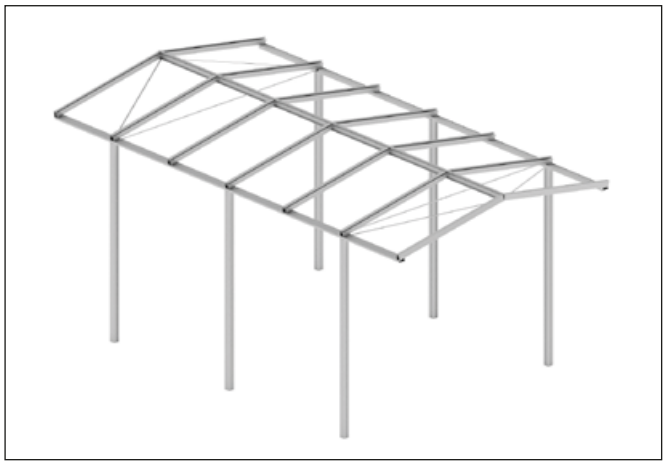

Note

In this assembly step, the remaining four inner roof rafters are attached.

11a

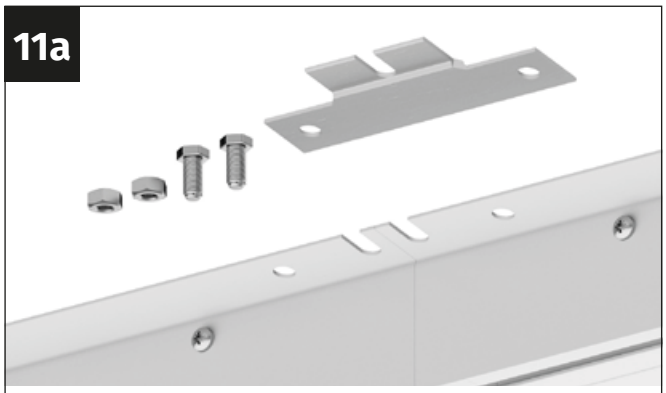

Take a connecting plate of the longitudinal beam, two M6x12 mm screws and two M6 flange nuts.

11b

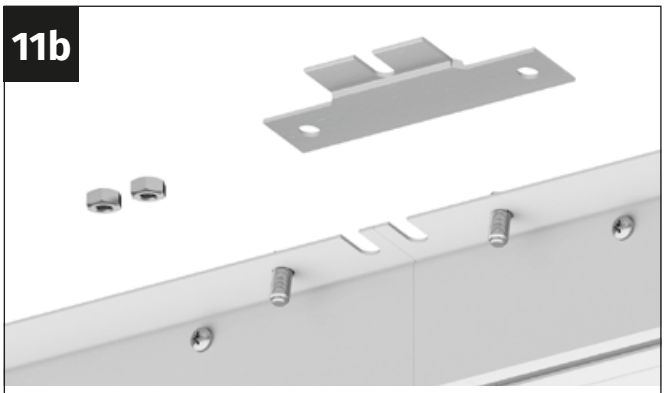

Insert the M6x12 mm screws into the holes in the longitudinal beam.

11c

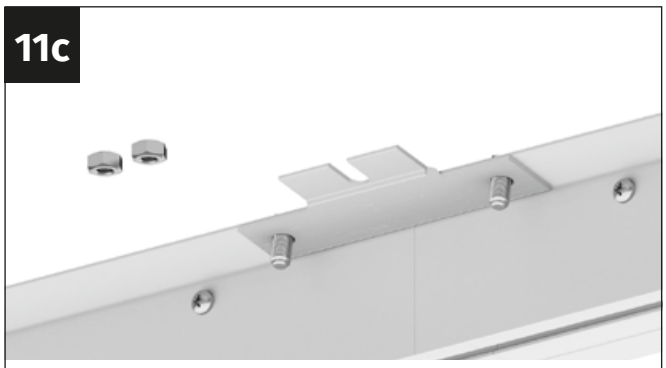

Position the connecting plate of the longitudinal beam so that the two M6x12 mm screws protrude through the cut-outs in the connecting plate.

11d

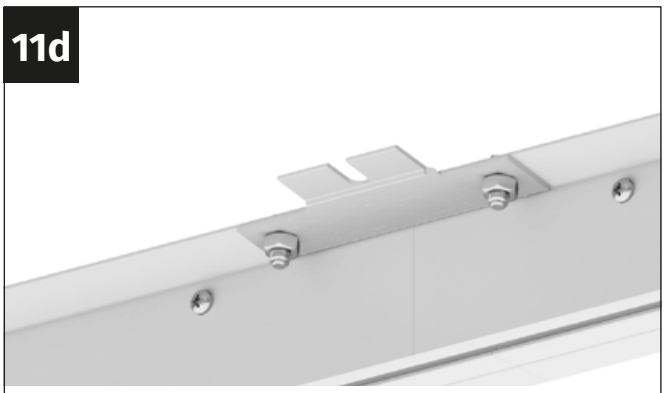

Screw the connecting plate of the longitudinal beam firmly to the longitudinal beam using the M6 flange nuts.

11e

Take a connecting plate of the ridge, four M6x12 mm screws and four M6 flange nuts.

11f

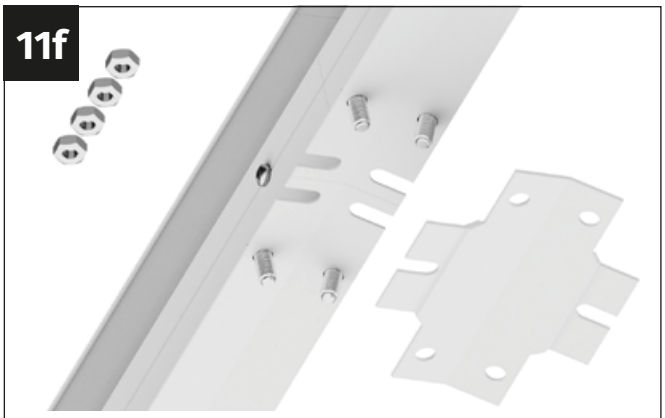

Insert the M6x12 mm screws into the holes in the ridge.

11g

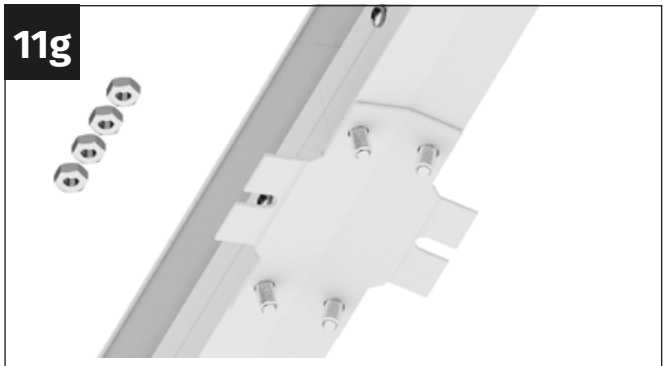

Position the connecting plate of the ridge so that the four M6x12 mm screws protrude through the cut-outs in the connecting plate.

11h

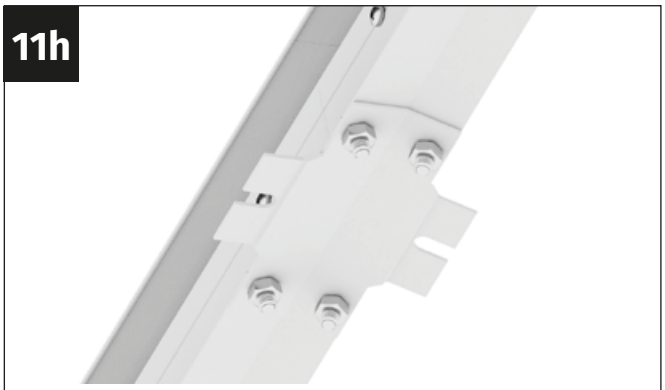

Screw the connecting plate of the ridge firmly to the longitudinal beam using the M6 flange nuts.

11i

Take a rafter, an M6x12 mm screw and an M6 flange nut.

11j

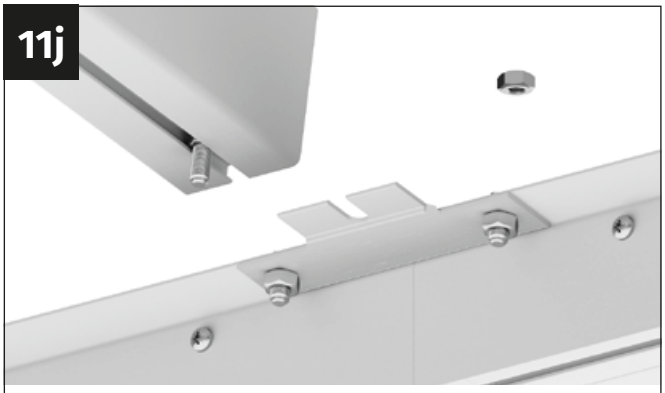

Insert the M6x12 mm screw into the screw channel of the rafter.

11k

Place the rafter on the longitudinal beam and insert the M6x12 mm screw into the prepared cut-out in the connecting plate.

11l

Screw the rafter to the longitudinal profile using an M6 flange nut.

Repeat

Screw the second rafter in place in the same way.

11m

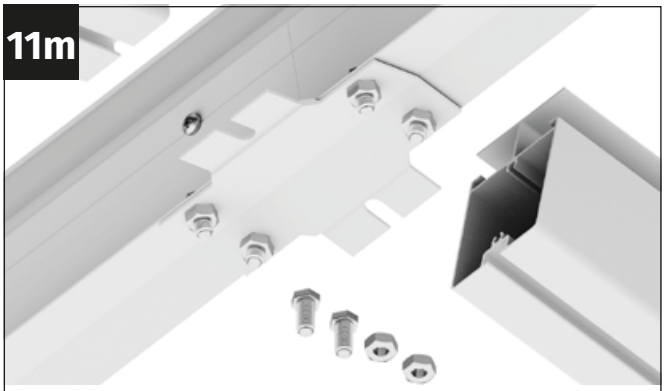

To screw the top of the rafters together, use two M6x12 mm screws and two M6 flange nuts.

11n

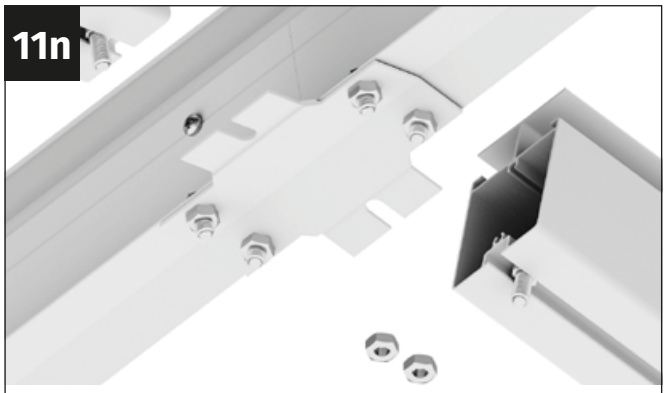

Insert an M6x12 mm screw into the screw channel of each rafter.

11o

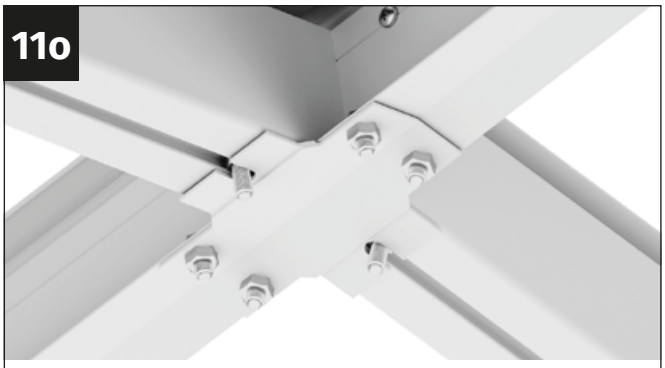

Place the rafters on the connector part and insert the M6x12 mm screws into the prepared cut-outs in the connector part.

11p

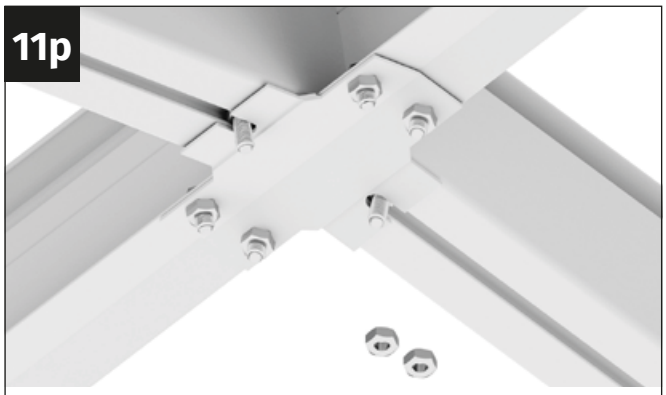

Screw the rafters firmly to the connector part using an M6 flange nut.

Repeat

Repeat these installation steps with the second pair of inner rafters at the position that is still free

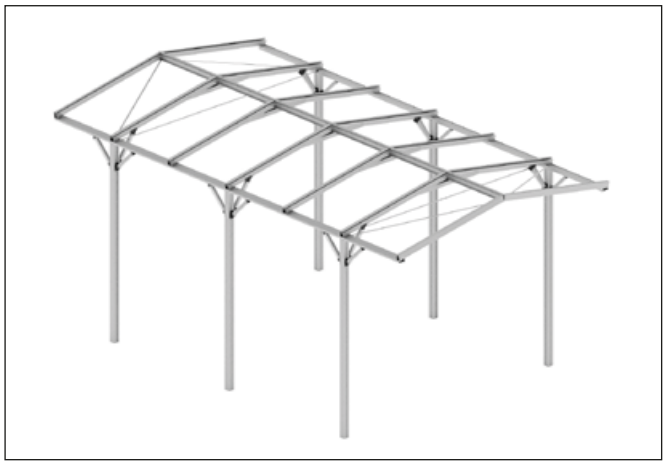

Note

The diagonal braces are attached in this assembly step. This requires 12 diagonal braces for connecting longitudinal beams and posts and 6 diagonal braces for connecting posts and rafters. Please sort the plastic parts of the diagonal braces carefully in advance according to the number stamped on them.

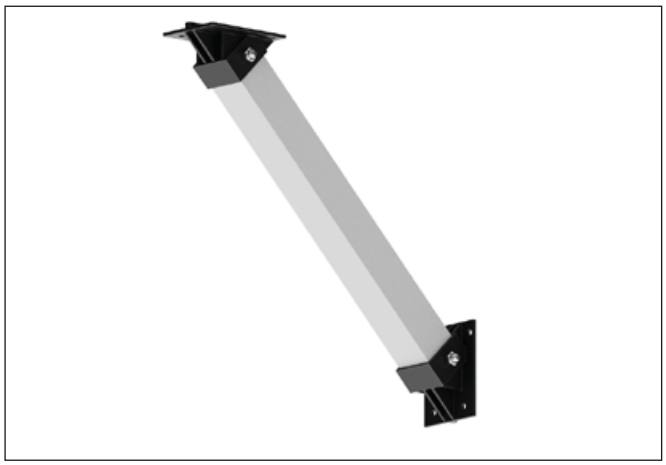

Note

The following parts are required for the diagonal braces to reinforce the posts with the longitudinal profiles (12 pcs. total):

- Diagonal brace profile: Length 323 mm
- Diagonal brace connector 45°, Art.No. CPP206

12a

Take a diagonal brace profile, two CPP206 diagonal brace connectors, two M6x50 mm screws and two M6 self-locking nuts.

12b

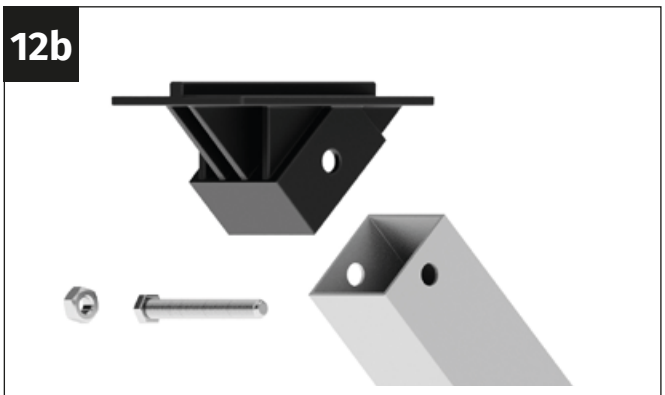

Start the assembly on one side of the diagonal brace profile. Installation is the same for both sides.

12c

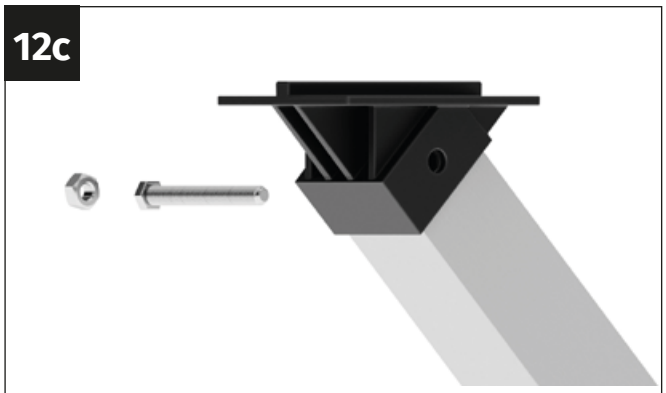

Attach the CPP206 diagonal brace connector firmly to the diagonal brace profile.

12d

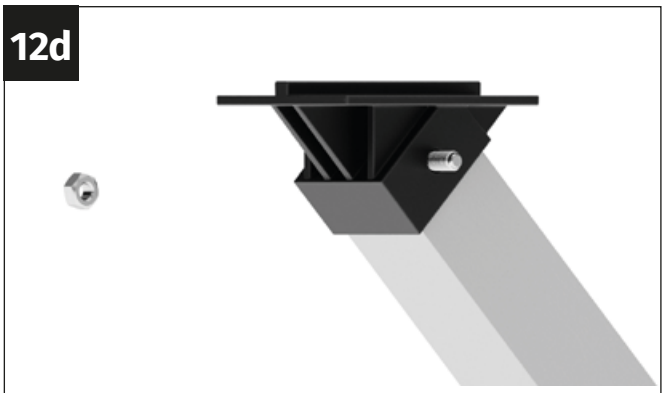

Insert the M6x50 mm screws through the holes in the diagonal brace profile and the diagonal brace connector.

12e

Screw the diagonal brace connector firmly to the diagonal brace profile. Tighten the nut firmly but carefully so that the plastic connector is not damaged.

Repeat

Fit the remaining eleven diagonal braces in the same way.

12f

Note

The following parts are required for the diagonal braces to reinforce the posts with the rafters (6 pcs. total):

- Diagonal brace profile: Length 323 mm
- Diagonal brace connector 35°, item.No. CPP208
- Diagonal brace connector rafter, item.No. CPP207

12g

Take a diagonal brace profile, a diagonal brace connector CPP208, a diagonal brace connector CPP207, two screws M6x50 mm and two self-locking nuts M6.

12h

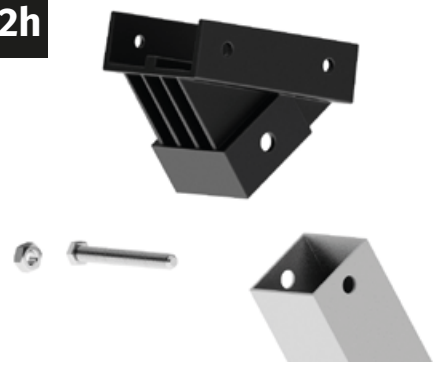

Use the diagonal brace connector CPP207 on the top of the headgear profile.

12i

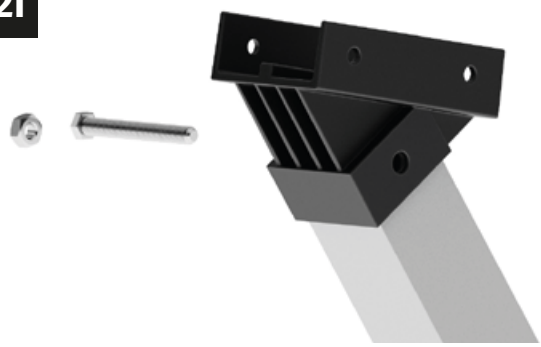

Attach the CPP207 diagonal brace connector firmly to the diagonal brace profile.

12j

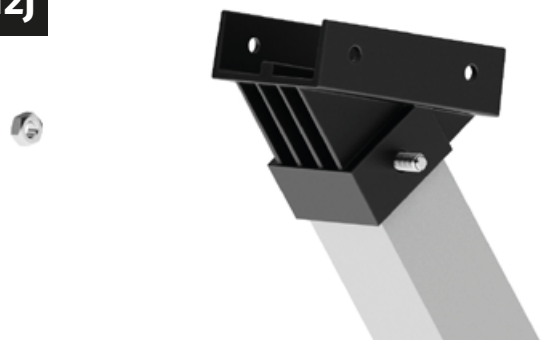

Insert the M6x50 mm screws through the holes in the diagonal brace profile and the diagonal brace connector.

12k

Screw the diagonal brace connector firmly to the diagonal brace profile. Tighten the nut firmly but carefully so that the plastic connector is not damaged.

Repeat

Fit the diagonal brace connector CPP208 in the same way on the underside of the diagonal brace profile.

13a

First, the diagonal braces are installed to connect the posts to the longitudinal beam.

Note

Make sure that the posts are aligned exactly vertically before screwing the diagonal braces in place. Take enough time for this!

13b

To position the diagonal brace connectors exactly, you can make a mark at exactly 202 mm on both the post and the longitudinal beams.

13c

Take a spirit level and align the post exactly plumb. Take your time for this - the more precisely you work here, the more stable the entire construction will be afterwards.

13d

Take an already prepared diagonal brace for connecting the post to the longitudinal beams, as well as eight 4.8x22 mm self-drilling sheet metal screws.

13e

Position the diagonal brace for bolting to the post and longitudinal beams.

13f

Screw the diagonal brace to the post and the longitudinal beams.

Note

Although self-drilling sheet metal screws are used for screwing, we recommend pre-drilling before screwing.

13g

Detailed view: Diagonal braces ready screwed to the post

Repeat

Screw the diagonal braces to the top of the longitudinal beam in the same way.

Assemble all twelve diagonal braces according to these assembly steps.

Note

Before assembly, we recommend supporting the ridge and spanning it slightly outwards. When installing the diagonal braces on the rafters, please ensure that the posts are exactly plumb! It is best not to remove the ridge support until after the carport has been glazed!

14a

To position the diagonal brace connectors exactly, you can make a mark on both the post and the rafter.

Note

To do this, measure 158 mm downwards from the lower nose of the longitudinal connector and make a mark on the post here.
Measure 140 mm upwards from the upper nose of the longitudinal connector and make a mark on the rafter here

14b

Take a spirit level and align the post exactly plumb. Take your time for this - the more precisely you work here, the more stable the entire construction will be afterwards.

14c

Take an already prepared diagonal brace for connecting the post to the rafter and eight 4.8x22 mm self-drilling sheet metal screws.

14d

Position the diagonal braces for screwing to the post and rafter.

14e

Align the position of the diagonal braces on the post exactly and use four 4.8x22 mm self-drilling screws.

14f

Screw the diagonal brace to the post using the four 4.8x22 mm sheet metal screws.

Note

Although self-drilling sheet metal screws are used for screwing, we recommend pre-drilling before screwing

14g

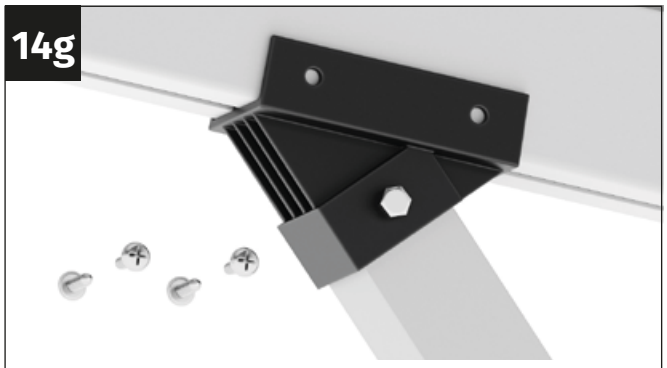

Align the position of the diagonal braces exactly on the rafter and use four 4.8x22 mm self-drilling screws.

14h

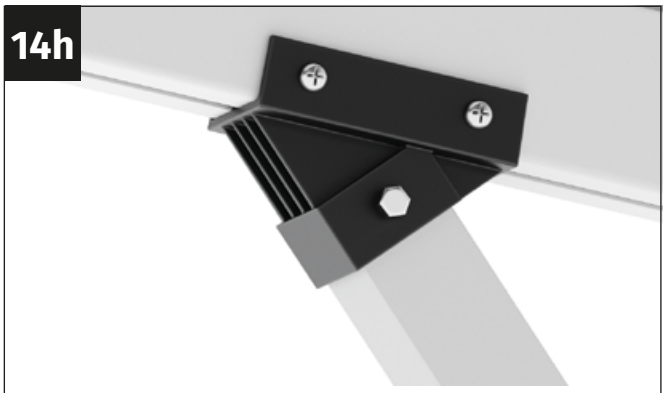

Screw the diagonal brace to the rafter using the four 4.8x22 mm sheet metal screws.

Note

Although self-drilling sheet metal screws are used for screwing, we recommend pre-drilling before screwing

14i

Repeat

Fit the remaining five diagonal braces in the same way.

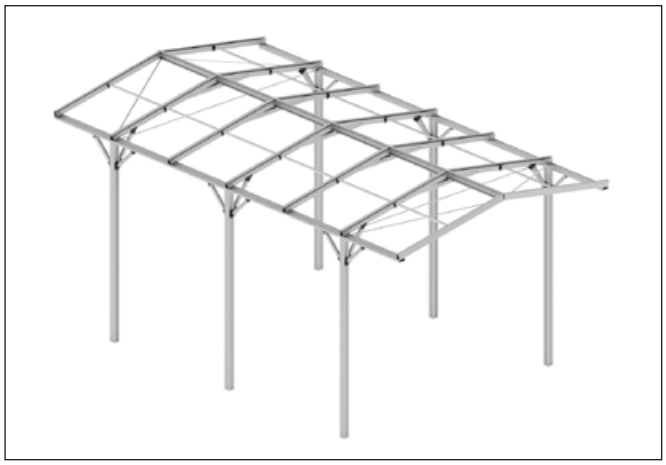

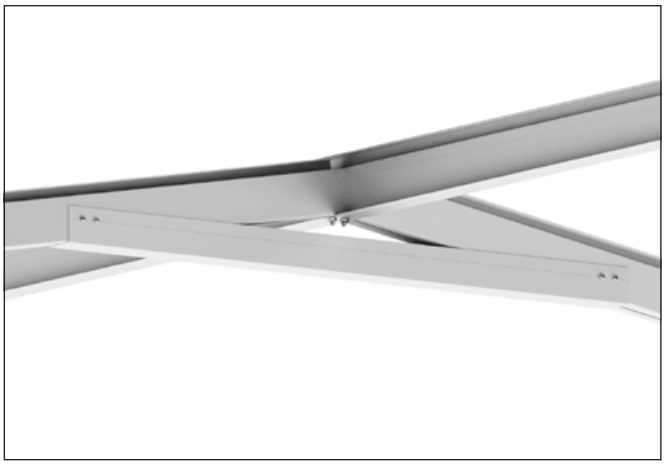

Note

Now the tension braces are attached to the rafters. These serve to make the roof as stable as possible. Therefore, please screw the tension braces together very carefully to ensure the best stability. Five tension braces are mounted on the inner rafters. The outer pairs of rafters remain without tension braces.

15a

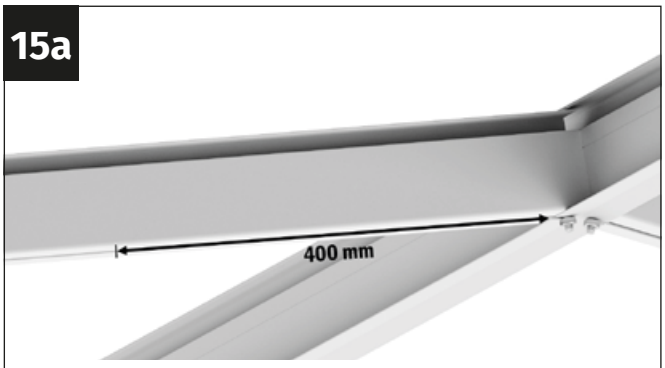

First measure 400 mm downwards from the end of the ridge fastening tab for each of the middle rafters and make a mark here.

15b

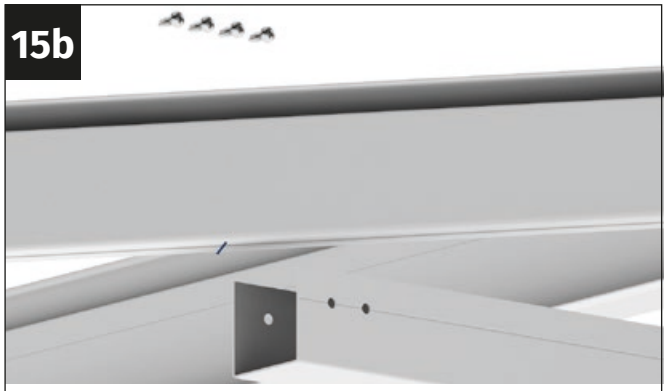

Take a tension brace and eight 4.8x13 mm self-tapping screws.

15c

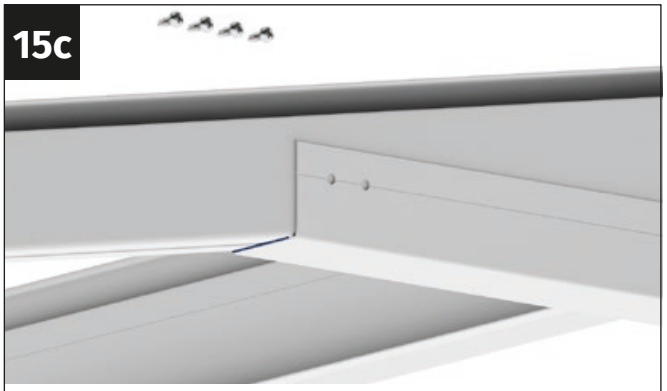

Place the tension braces on the rafters. Position it exactly on the previously applied marking.

15d

Screw the tension strut to each side with four 4.8x13 mm self-tapping screws.

Repeat

Assemble the remaining four tension braces in the same way.

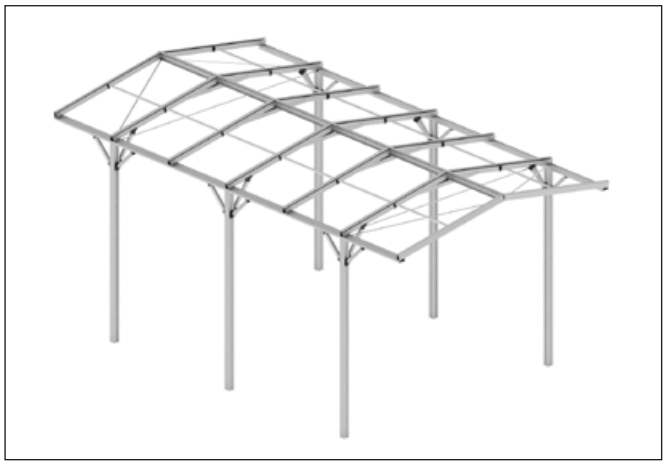

Note

In this assembly step, the supports for the twin-wall sheets are fitted. These supports prevent the twin-wall sheets from bending, even with higher snow loads. For this purpose, supports are installed in which aluminium profiles are inserted, which serve as supports.

Note

The supports are mounted exactly in the middle between two rafters. We recommend measuring 660 mm downwards on each of the rafters, starting at the end of the ridge fixing tab, and making a mark there.

16a

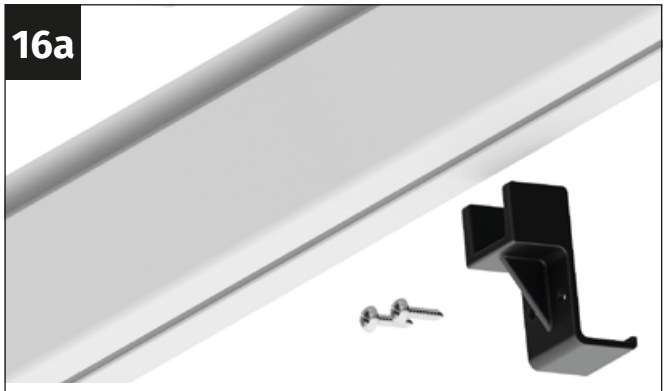

Take two support brackets (CPP205), four 4.8 x 13 mm self-tapping screws and a support profile.

16b

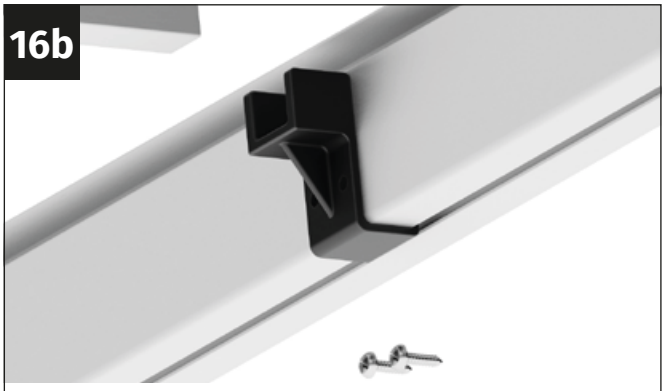

Place the support bracket on the rafter from below and position it exactly in the middle of the rafter.

16c

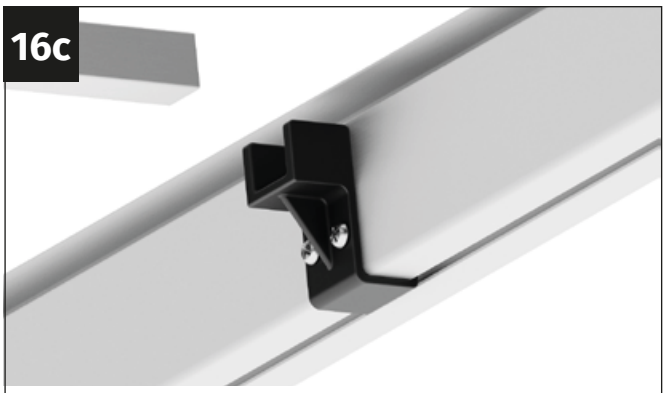

Screw the retaining support in place with two 4.8 x 13 mm self-tapping screws.

Repeat

Screw the opposite support bracket in the same way.

16d

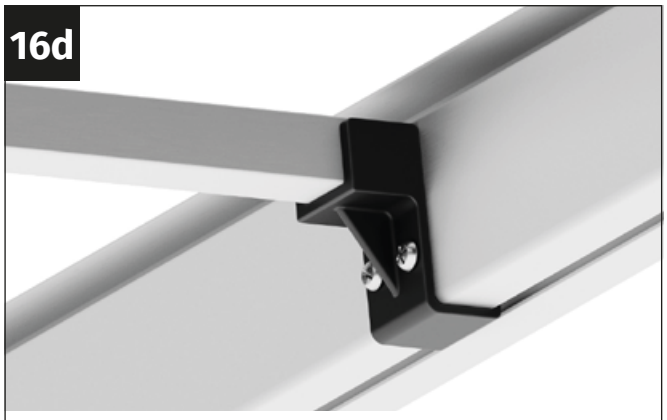

Insert the support profile into the two retaining supports.

Repeat

Carry out these steps with all twelve support brackets.

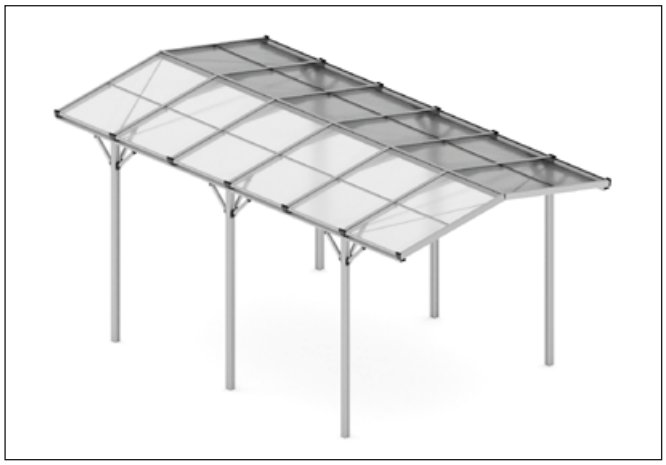

Note

Next, the twin-wall sheets are installed. A stiffening profile is attached to the underside of each twin-wall sheet for this purpose.
The twin-wall sheets are then inserted into the U-formations of the rafters from the side. Finally, plastic covers are attached to the rafters to ensure that the twin-wall sheets cannot slip out of the construction.

17a

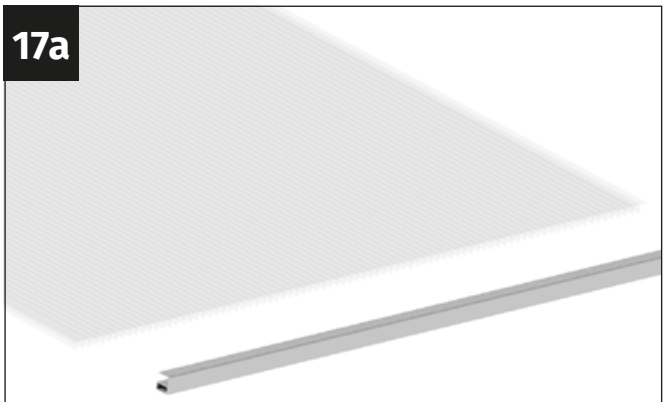

Take a twin-wall sheet and a stiffening profile.

17b

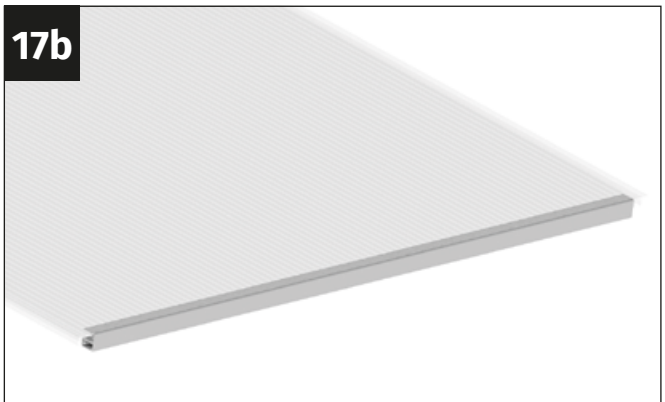

Attach the stiffening profile to the twin-wall sheets.

Make sure that the outside of the twin-wall sheets is facing outwards even after installation in the aluminium frame! The shaped "U" of the stiffening profile points upwards after installation in the carport frame!"

17c

Insert the prepared twin-wall sheets from the side into the shaped "U" of the rafters.

17d

Slide the sheet upwards so that the underside of the stiffening profile is flush with the rafters.

17e

See the detailed view of an external rafter, viewed from the outside.

17f

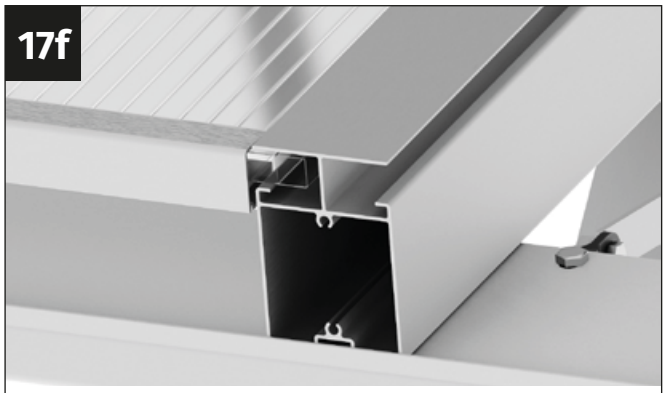

See the detailed view of a middle rafter, viewed from the outside.

17g

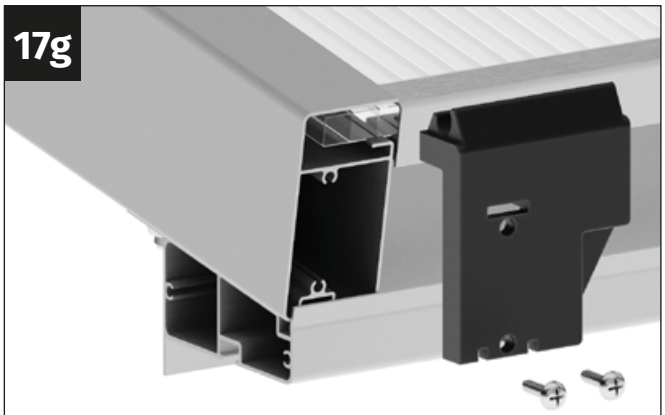

A cover cap is now attached to each rafter.

Note

Please use the following plastic caps on the outer rafters:

- Cover cap left: CPP204L
- Cover cap right: CPP204R

Also use two 4.8 x 22 mm self-tapping screws each

17h

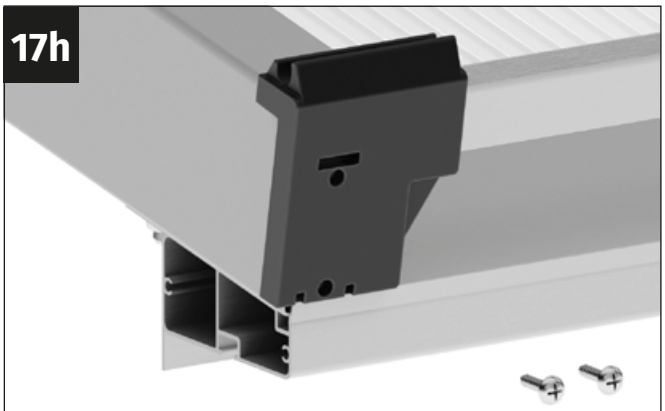

Place the cover cap on the outer rafter.

17i

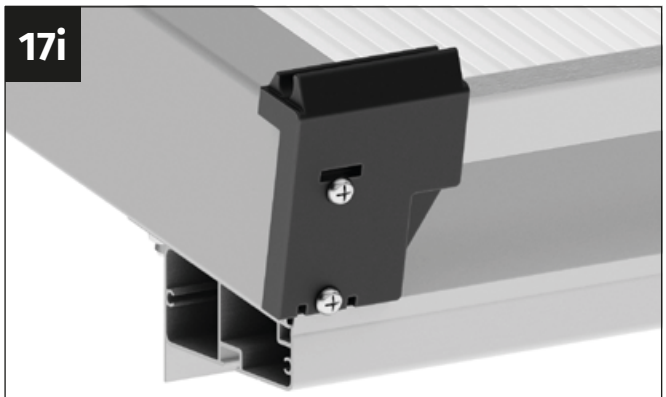

Screw on the cover cap with the two 4.8x22 mm self-tapping screws

17j

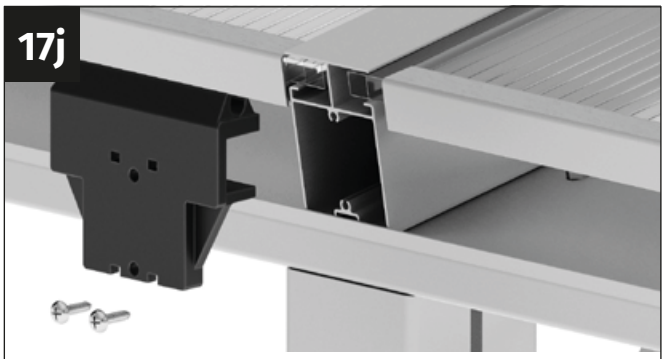

Please use the following plastic cap on the inner rafters: Center cover cap: CPP203. Also, use two 4.8 x 22 mm self-tapping screws.

17k

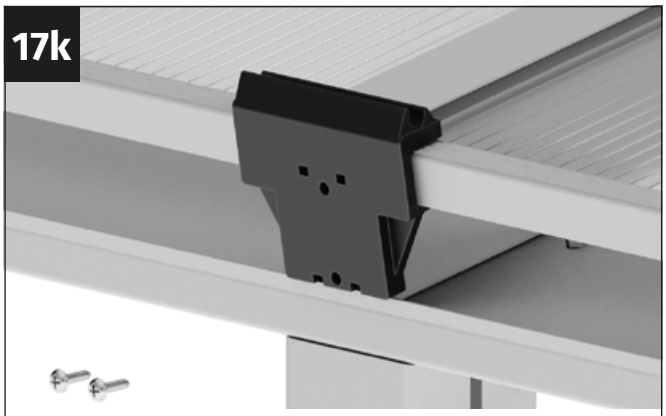

Place the cover cap on the inner rafter.

17l

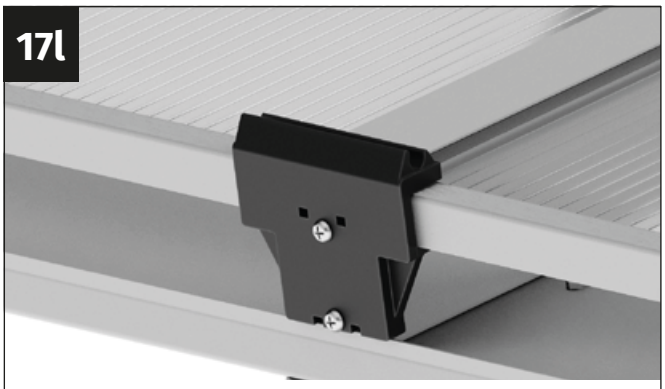

Screw the cover cap in place using the two 4.8 x 22 mm self-tapping screws.

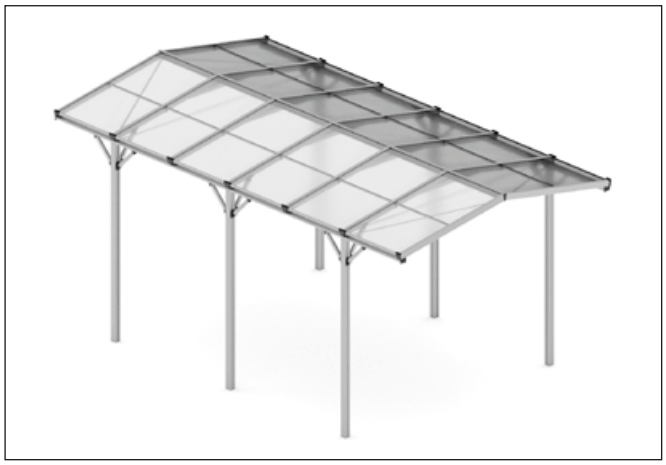

Note

In this assembly step, the covers are attached to the longitudinal beams and the ridge.

A cover cap is now attached to each longitudinal beam.

Note

Please use the following plastic caps:

- Cover cap longitudinal beam left: CPP202L
- Cover cap longitudinal beam right: CPP202R
- Also use two 4.8 x 13 mm self-tapping screws.

Place the cover cap on the longitudinal beam.

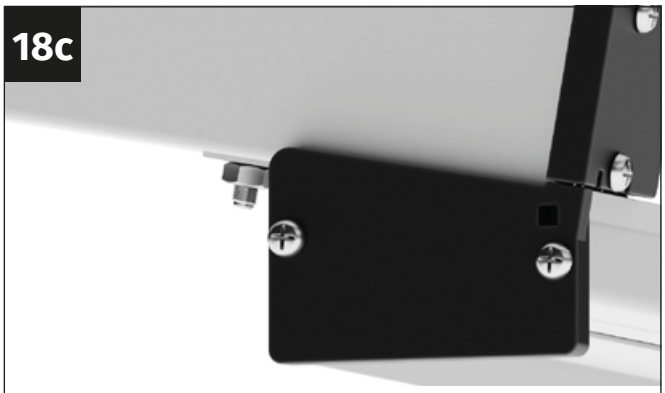

Screw the cover cap in place using the two 4.8 x 13 mm self-tapping screws.

Note

Please use the following plastic cap on the ridge:

- Ridge cover cap: CPP201
- Also use two 4.8 x 13 mm self-tapping screws.

18e

Place the cover cap on the ridge.

18f

Screw the cover cap in place using the two 4.8 x 13 mm self-tapping screws.

Congratulations! You have installed the carport!

1/1 Rain gutter package for carport (package 1 of 1)

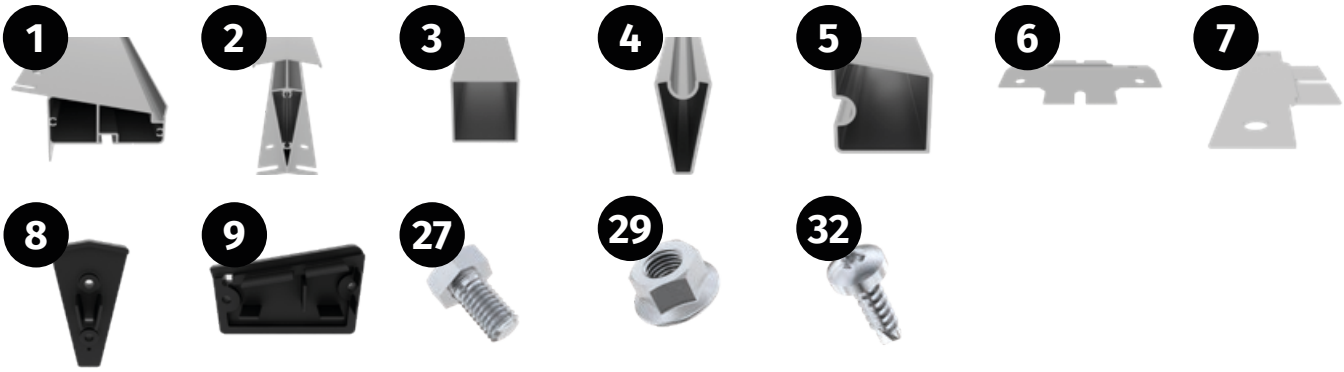

1/1 Rain gutter package for carport (package 1 of 1)

Part	Item number	Designation	Length	Pcs.
1	CPA208_1678_v1	Rain gutter with hole (outer part)	1678 mm	**4**
2	CPA208_1678_v2	Rain gutter without hole (inner part)	1678 mm	**2**
3	CPA211_0200_v1	Rain gutter connector	200 mm	**4**
4	CPA201	Gutter bracket		**12**
5	CPA202	Rain gutter cover		**4**
6	CP105	Rain gutter drain connection		**4**
7	690509	M6x12 screw		**12**
8	690548	Hex nut M6 with flange		**12**
	9040556	Self-tapping screws 4.8 x 13		**48**

Note

We offer an optional rain gutter set as an accessory. If you have decided to purchase a rain gutter set, we will explain the installation of the rain gutter on your carport in detail in the following steps.

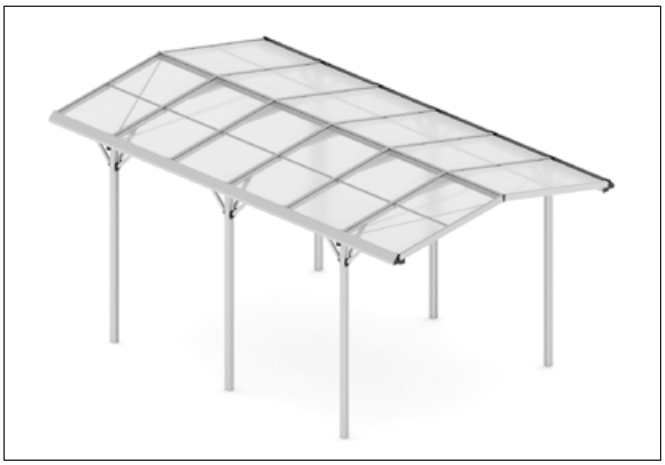

Note

There are two different types of gutter parts: those with a hole for the drain outlet and those without a hole. Each rain gutter consists of two parts with a hole and one part without a hole. The part without a hole is positioned in the middle between the two parts with a hole

Note

Take two gutter parts with a hole, one gutter part without a hole, two gutter connectors, two M6x12 mm screws and two 4.8x13 mm self-tapping screws.

1a

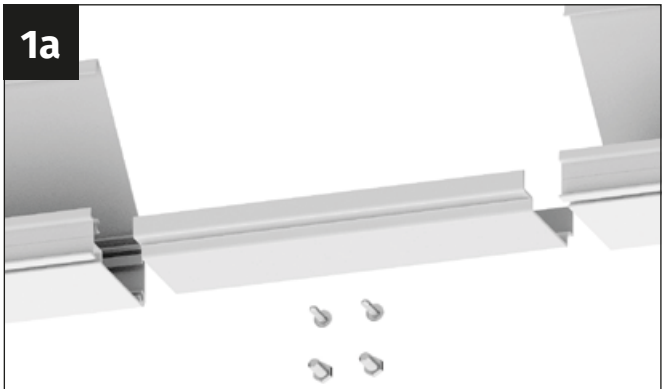

Position the gutter section without a hole in the middle, between the two gutter sections with a hole.

1b

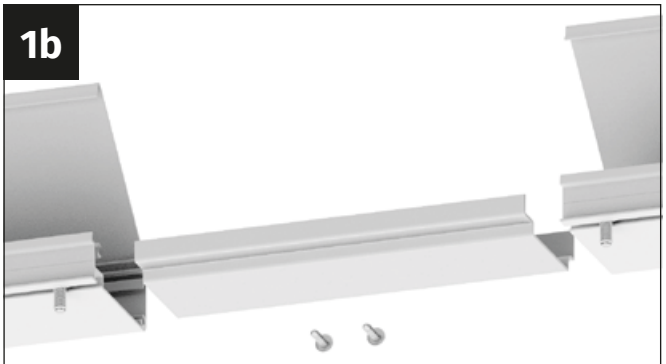

Insert one M6x12 mm screw into the screw channel of both rain gutter parts.

1c

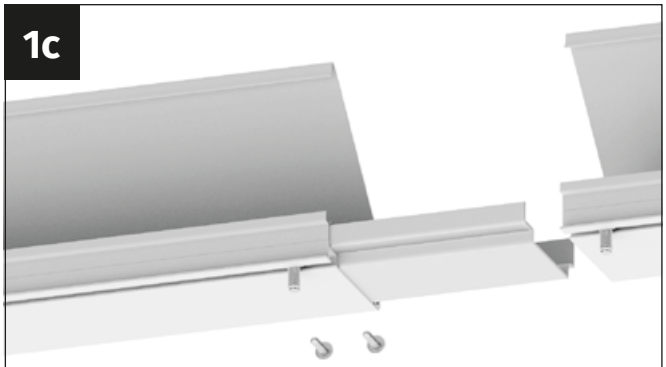

Insert the longitudinal beam connector halfway into the rain gutter profile. Make sure that the connector protrudes 100 mm from the gutter profile.

1d

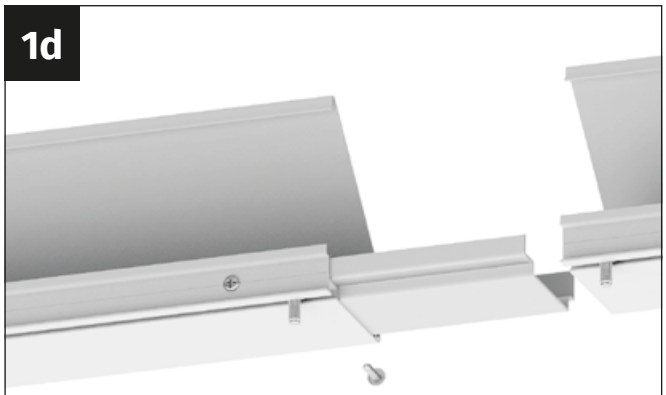

Screw the connector to the gutter profile using a 4.8 x 13 mm self-tapping screw.

1e

Place the second gutter profile on the already installed connector.

1f

Press the gutter profile firmly together until no gap is visible. Then screw the connector to the gutter profile using a 4.8 x 13 mm self-tapping screw.

Repeat

Repeat these installation steps with the third gutter profile.

Install the second gutter in the same way as the first.

2a

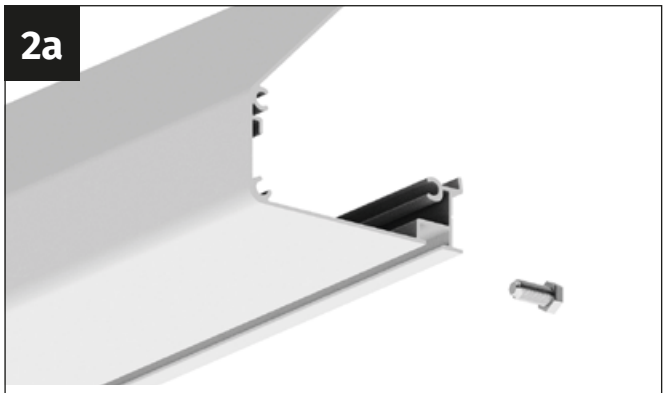

Pick up the prepared rain gutter and two M6x12 mm screws.

Note

The rain gutter must be installed by at least two people!

2b

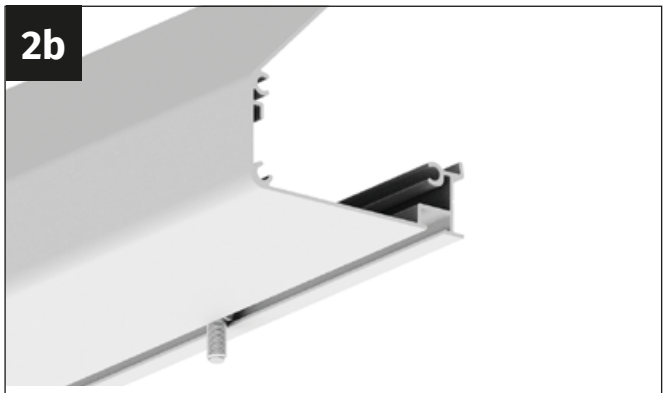

Insert one M6x12 mm screw at each end of the rain gutter into the screw channel of the rain gutter.

2c

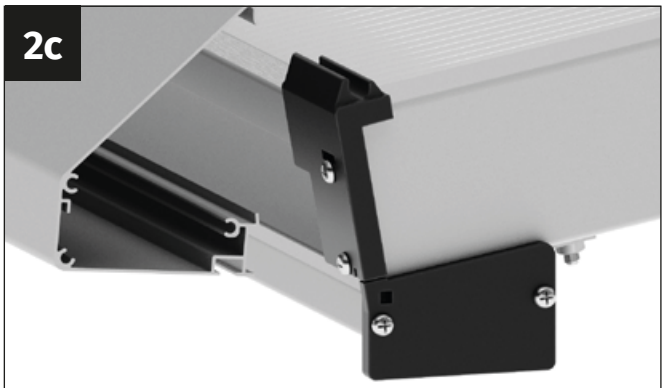

Take the rain gutter and position it on the correct side of the carport.

2d

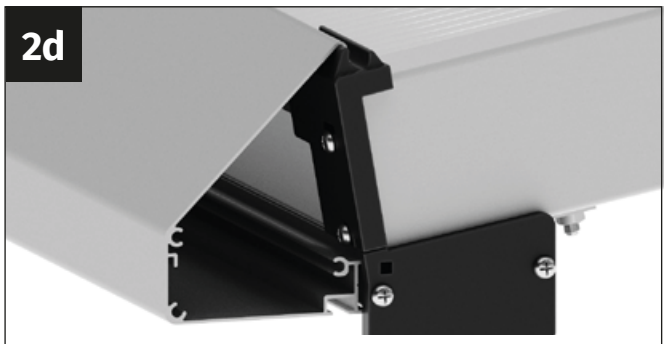

Hook the rain gutter with the upper nose of the rain gutter into the cover caps of the rafters. Align the gutter so that it is exactly flush with the longitudinal beam of the carport.

2e

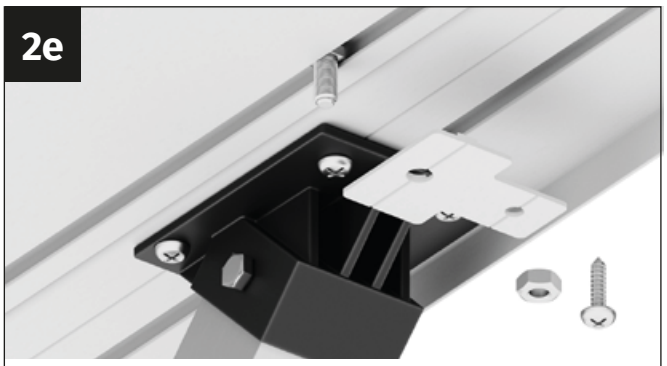

The gutter brackets are positioned next to each diagonal brace connector! Take a gutter bracket, an M6x12 mm screw and a 4.8x13 mm self-tapping screw.

2f

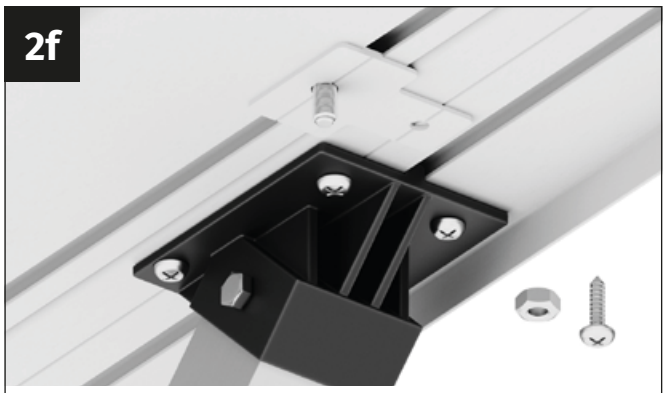

Place the gutter bracket on the M6x12 mm screw so that the screw protrudes through the hole in the gutter bracket.

2g

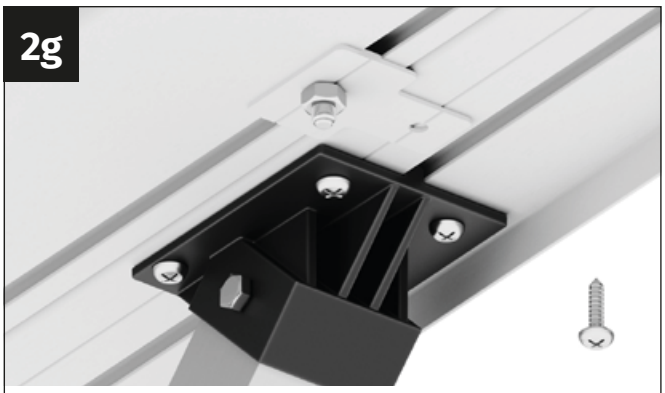

Screw the gutter bracket to the gutter using an M6 flange nut

2h

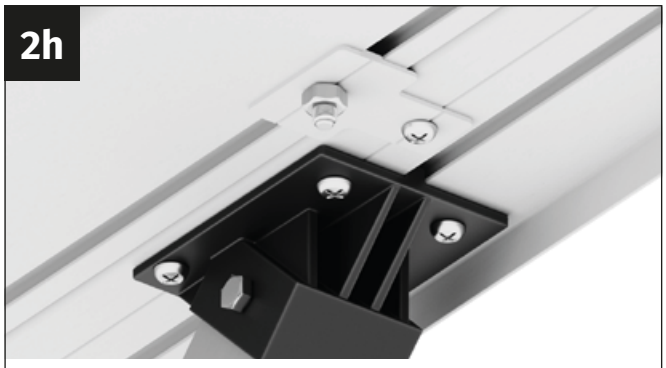

Press the gutter firmly against the longitudinal beam of the carport and attach the gutter bracket using the 4.8x13 mm self-tapping screws. We also recommend pre-drilling here.

3a

Take a drain socket and four 4.8x13 mm self-tapping screws.

3b

Position the drain connector exactly under the pre-drilled hole in the rain gutter

3c

Screw the drain connector in place using the four 4.8x13 mm self-tapping screws. We also recommend pre-drilling here.

Repeat

Install the other three drain outlets in the same way

3d

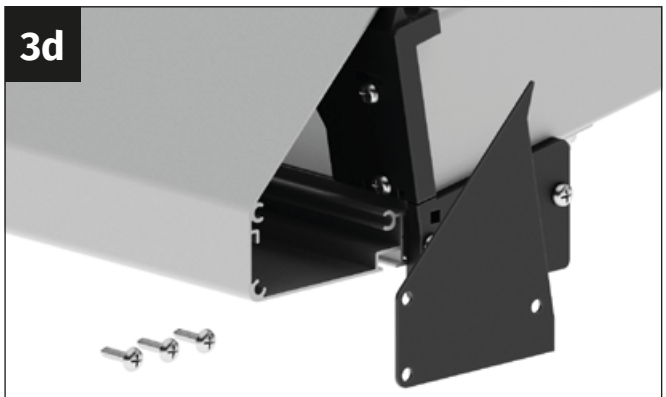

Take the rain gutter cover and three 4.8x13 mm self-tapping screws.

3e

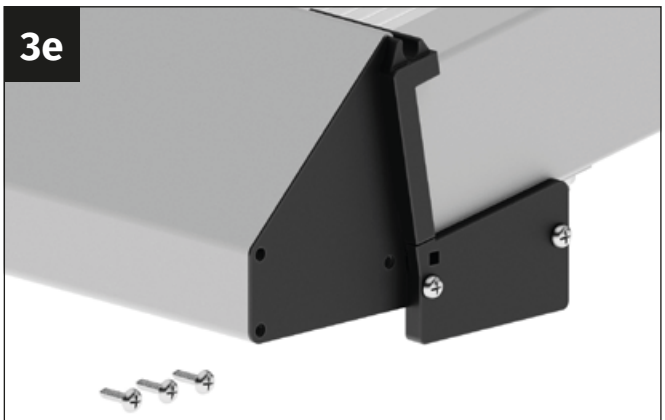

Place the rain gutter cover on the rain gutter.

3f

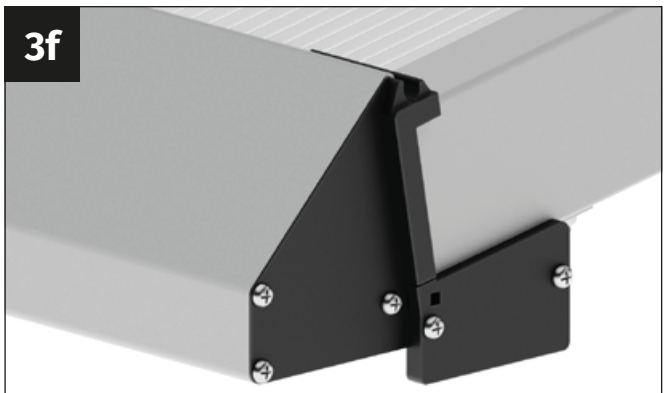

Screw the rain gutter cover in place using the three 4.8x13 mm self-tapping screws.

Repeat

Install the other three drain outlets in the same way

distributed by
GFP Handels GesmbH
Passauerstrasse 24
A-4070 Eferding

www.gfp-international.com

Toolport GmbH
Gutenbergring 1-5
D-22848 Hamburg

www.toolport.de

CPS-ELO / CPSR-ELO / CPS-ANT / CPSR-ANT

01/2024 V01.0